THE HOME CONSTRUCTORS WIRELESS GUIDE

W. JAMES

PRICE 3/6 NET

WIRELESS PRESS

THE WIRELESS PRESS LTD
12-13 HENRIETTA ST. LONDON. W.C.2

PAGE 150

Gordon Hutchison

75 Macpherson

Mosman

XMI 4/21

4 00

Gordon Hutchison

113 Inkerman St

St Kilda

THE HOME CONSTRUCTOR'S WIRELESS GUIDE

THE HOME CONSTRUCTOR'S WIRELESS GUIDE

BY

W. JAMES

SECOND IMPRESSION

ALL RIGHTS RESERVED

LONDON
THE WIRELESS PRESS, LTD.
12 & 13, HENRIETTA STREET, W.C. 2
NEW YORK: WIRELESS PRESS INC., 326 BROADWAY

1924

Printed in Great Britain.

Gordon Hutcheson
75 Macpherson
Wooman
phone XM1421

THE WIRELESS PRESS, LTD.

FOREIGN AND COLONIAL AGENCIES:

SYDNEY, N.S.W.: 97, Clarence Street.

MELBOURNE: 422/4, Little Collins Street.

MADRID: La Prensa Radiotelegrafica, 43, Calle de Alcala.

GENOA: Agenzia Radiotelegrafica Italiana, Via Varese 3.

AMSTERDAM: Nederlandsch Presbureau Radio, 562 Keizersgracht.

PREFACE

THERE are few people who can derive pleasure from a study which is merely a mental exercise, but where practical application is possible, the satisfaction of knowledge becomes a source of real enjoyment. A study of mathematics may be cited as one of those mental exercises which a student never fully appreciates until he is able to apply it to the solution of practical problems.

The average wireless amateur at the present time usually reverses the normal order of things, and acquires a fair practical knowledge of the nature and operation of wireless apparatus first, leaving theoretical studies to a later date. There are many who are even tempted to ignore all but the practical side, believing that they can acquire all the theory they need from practical experience alone. The fallacy of this attitude is obvious. It is only by a proper understanding of the function of each component that one is able to modify circuits and conduct experimental work with confidence in obtaining results, and with an appreciation of the effect which various modifications will have.

The volume now presented to the public differs essentially from many books on the subject of wireless which have appeared recently, in that it is written by an engineer who has also a large amount of experience of the practical difficulties encountered

by students through acting as technical supervisor of the " Questions and Answers " Department of *The Wireless World and Radio Review*, whereas many other books which are at present on the market constitute little more than a re-hash by technical journalists of information gleaned from various publications. In all his writings the present author strikes a new note and inspires the confidence of his reader, because he not only explains, but shows his reader how his explanation is arrived at in such a way that the reader himself can follow the reasoning and acquire the same confidence to tackle his own difficulties—not by rule of thumb because he has been told that it is so, but because he has been shown how to reason and understand each step for himself.

Undoubtedly the reader of this book will find that in a week or two he can reach to a higher standard than the average man can acquire after months, perhaps years, of practical experience alone, whilst in addition he will have confidence in everything which he does, for the reason that he will be in a position to understand *the reason why*.

HUGH S. POCOCK,
Editor, The Wireless World and Radio Review.

November, 1923.

CONTENTS

CHAPTER I.—Aerials and Earths

PAGE

A.—The Outdoor Aerial.
Building the Best Outdoor Aerial . . . 3

B.—The Lead-in.
Special Points to be Observed 6

C.—The Earth.
How to Construct a good Earth . . . 8

D.—The Counterpoise.
Its Construction 10

E.—Frame Aerials.
The Best Size. 11

F.—Indoor Aerials.
Use and Construction 13

G.—Protection.
How to Protect from Lightning . . . 14

CHAPTER II.—Tuners and Couplings

A.—The Tuner.
1. The Object of a Tuner 16
2. Wavelength Tables 17

B.—Single Circuit Tuners.
The Tapped Coil 21

C.—Variometers.
Dimensions for Broadcast Wavelengths. . . 22

PAGE

D.—VARIABLE CONDENSERS AND PLUG-IN COILS.

1. Tuning with a Fixed Coil, and Variable Condenser 25
2. Construction of Basket Coils 26
3. The Best Size of Tuning Condenser . . 27
4. Plug-in Coils and Tuning Tables . . . 28

E.—SWITCHING.

Tuning Condensers in Series or Parallel . . 31

F.—COUPLED CIRCUITS.

1. The Object of Coupled Circuits . . . 32
2. A Loose Coupler 32
3. Use of a Vario-coupler. 34
4. The Untuned Aerial Circuit 35
5. Coil-holders 36

G.—FAULTS.

Common Faults in Tuners 37

H.—CONNECTING CONDENSERS AND VARIOMETERS.

Best Methods 37

CHAPTER III.—Condensers and Coils

A.—VARIABLE CONDENSERS.

1. Construction 38
2. Table giving Particulars of the Plates required for Various Capacities 42

B.—FIXED CONDENSERS.

1. Construction 43
2. Tables giving Particulars of the Plates required for Various Capacities 45

C.—CYLINDRICAL COILS.

1. How to Find their Inductance . . . 47
2. Charts showing Inductance of Various Coils . 50

D.—WAVELENGTH.

How to Find the Wavelength of a Tuner . . 51

E.—INDUCTANCE COILS FOR SHORT WAVELENGTHS

Considerations for Good Design . . . 54

PAGE

F.—HOW TO IMPROVE THE TUNING OF YOUR SET.

1. The Tuning Coil 57
2. The Condenser 60
3. The Tuning Range 61

CHAPTER IV.—Crystal Receivers

A.—CRYSTAL RECEIVERS.
The Essential Components 63

B.—ASSEMBLING A CRYSTAL RECEIVER.
Arrangement of Components 66

C.—CRYSTAL DETECTORS.
Types of Crystal Detectors 66

D.—MOUNTING CRYSTALS.
How to Fix Crystals 68

E.—ADJUSTING A CRYSTAL RECEIVER.
How to Tune-in 68

F.—FUNCTION OF CRYSTAL DETECTOR.
The Reason for the Use of a Detector . . 70

G.—FAULTS.
Common Faults 71

CHAPTER V.—The Valve

A.—HOW A VALVE WORKS.
Underlying Principle of the Valve . . . 73

B.—EFFECT OF VARYING THE FILAMENT TEMPERATURE 74

C.—THE EFFECT OF CHANGING THE PLATE VOLTAGE 75

D.—WILL THE VALVE RECTIFY? 76

E.—THE TWO-ELECTRODE VALVE.
How it Rectifies. 76

F.—THE THREE-ELECTRODE VALVE.
Construction 79

PAGE

G.—ACTION OF GRID.
1. Introduction of the Grid 81
2. Controlling Effect of the Grid . . . 82
3. Internal Resistance 83

H.—PARTICULARS OF VALVES.
Choice and Operating Particulars. . . . 84

I.—Dull EMITTERS.
Operation 92

J.—THE BEST VALVE.
Choosing the Best Valve 95

CHAPTER VI.—The Three-Electrode Valve

A.—THE THREE-ELECTRODE VALVE AS RECTIFIER.
Rectification without Grid Condenser and Leak . 99

B.—THE GRID CONDENSER AND LEAK.
Operation 101

C.—BEST ADJUSTMENTS.
Choice of Values 104

D.—REACTION.
1. What is Reaction ? 106
2. How is it Obtained ? 107

E.—SELF-OSCILLATION.
How it is Caused 110

CHAPTER VII.—The Valve Amplifier

A.—THE VALVE AS AN AMPLIFIER . . . 114

B.—CONDITIONS OF AMPLIFICATION . . . 114

C.—HIGH-FREQUENCY AMPLIFICATION.
1. The Grid Circuit 115
2. The Plate Circuit 118

D.—TRANSFORMER COUPLING 118

E.—TUNED ANODE COUPLING 122

F.—RESISTANCE COUPLING 125

PAGE

G.—THE DETECTOR VALVE.
1. The Grid Circuit 126
2. The Plate Circuit 127

H.—LOW-FREQUENCY AMPLIFICATION . . . 131

I.—RESISTANCE COUPLING 132

J.—CHOKE COUPLING. 133

K.—TRANSFORMER COUPLING.
1. Principles of 133
2. Distortion 137
3. Improving Quality 140

CHAPTER VIII.—How to Assemble the Receiver

A.—TWO-VALVE RECEIVER 144

B.—TWO-VALVE NOTE MAGNIFIER 146

C.—THREE-VALVE RECEIVER.
1. Construction 148
2. Wiring 150
3. Operation 152

D.—A UNIT RECEIVER.
Construction and Operation 152

E.—CIRCUITS OF RECEIVERS 156

F.—FAULTS 166

CHAPTER IX.—Sensitive Single-Valve Receivers

A.—SINGLE-VALVE AMPLIFIER WITH CRYSTAL RECTIFIER.
Construction and Operation 170

B.—SINGLE-VALVE DOUBLE MAGNIFICATION (1).
Construction and Operation 173

C.—SINGLE-VALVE DOUBLE MAGNIFICATION (2).
Construction and Operation 176

D.—REINARTZ SINGLE-VALVE RECEIVER.
Construction and Operation 178

PAGE

E.—THE FLEWELLING RECEIVER.
Construction and Operation 181

F.—THE SINGLE-VALVE ARMSTRONG SUPER-REGENERATIVE RECEIVER.
Construction and Operation 184

CHAPTER X.—Dry Cells and Accumulators

A.—DRY CELLS.
1. Construction 187
2. Cells in Series 188
3. Cells in Parallel 189

B.—ACCUMULATORS.
Construction 190

C.—CHARGING 192

D.—AMPERE-HOUR CAPACITY 193

E.—CHARGING FROM DIRECT CURRENT MAINS . 193

F.—THE CHARGING FRAME 195

G.—CHARGING FROM ALTERNATING CURRENT MAINS.
Rectifiers 197

H.—PLATE CIRCUIT CURRENT FROM ALTERNATING CURRENT MAINS 198

SYMBOLS.

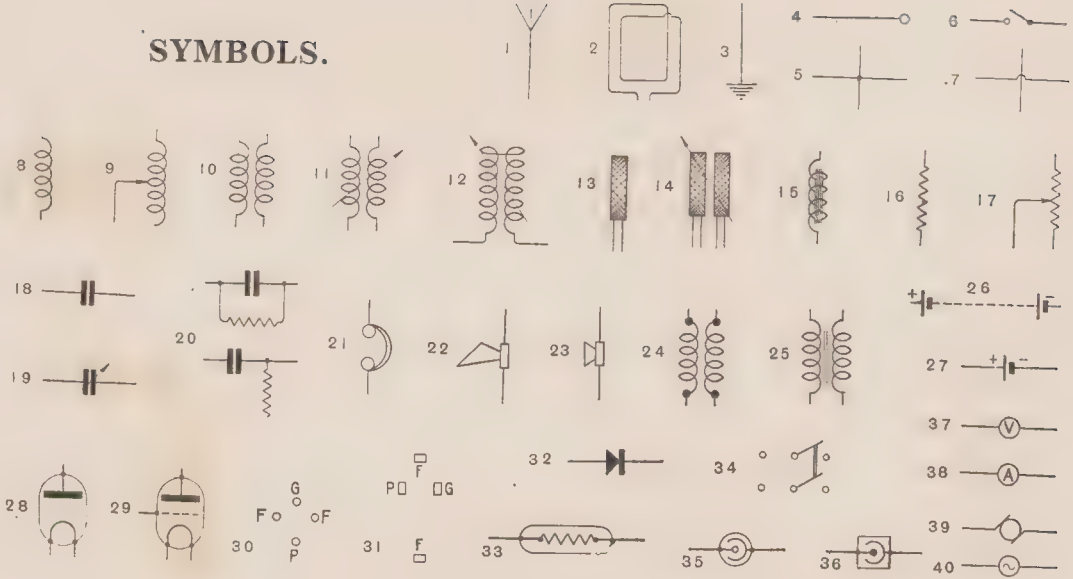
1
2
3
4
5
6
7
8
9
10
11
12
13
14
15
16
17
18
19
20
21
22
23
24
25
26
27
28
29
30
31
32
33
34
35
36
37
38
39
40
G
F
P
V
A

SYMBOLS

It is thought a number of readers may find it difficult to appreciate the meaning of the various symbols which are used in wireless diagrams. Here we give the symbols ordinarily used, together with sufficient explanatory text that the reader should in future be in a position to properly interpret diagrams with which the symbols are associated.

1, Outdoor aerial; 2, Frame aerial; 3, Earth; 4, Terminal; 5, Connection; 6, Simple switch; 7, Wires crossing; 8, Air core coil or tuning coil; 9, Tapped coil; 10, Two coils coupled; 11, Two coils with variable coupling; 12, Variometer; 13, Plug-in coil; 14, Variable coupling; 15, Iron core choke coil; 16, Fixed resistance; 17, Variable resistance; 18, Fixed condenser; 19, Variable condenser; 20, Grid condenser and leak; 21, Telephones; 22, Loud speaker; 23, Microphone; 24, High frequency transformer; 25, Low-frequency transformer; 26, Battery; 27, Cell; 28, Two-electrode valve; 29, Three-electrode valve; 30, Feet of R type three-electrode valve; 31, Feet of V24 type valve; 32, Crystal detector; 33, Barretter tube; 34, Two-pole throw-over switch; 35, Neon tube; 36, Chemical rectifier; 37, Voltmeter; 38, Ammeter; 39, Direct current generator; 40, Alternating current generator.

THE HOME CONSTRUCTOR'S WIRELESS GUIDE

INTRODUCTION

A WIRELESS receiver is divisible into several parts, as follows : (1) The aerial. (2) The tuner. (3) The rectifier. (4) The amplifier. (5) The sound-reproducing device.

1. The aerial may consist of (*a*) an outdoor elevated wire, combined with an earth connection ; (*b*) a frame or loop which as its name suggests, consists of a large frame wound with a few turns of wire ; (*c*) an indoor aerial, which may consist simply of an insulated wire hung round a room ; or (*d*) the electric light mains—connection with which is established through a special connector.

2. The tuner may be constructed in a number of different ways, but briefly we may say there are two types : (*a*) the single-circuit type, and (*b*) the two-circuit type.

3. The rectifier may be (*a*) either a crystal detector combination, or (*b*) a valve suitably connected.

4. There are, broadly, two sorts of amplifier : (*a*) the high-frequency amplifier, which is arranged to amplify signals before they are rectified ; and

(*b*) the low-frequency amplifier, or, to use perhaps a better term, the note magnifier.

5. The sound-reproducing device in the majority of cases is a telephone earpiece fitted to (*a*) head bands; or (*b*) a trumpet, when it is called a loud speaker.

The aim of the author in presenting this volume has been to deal in turn with each sub-division of the complete receiving installation. In this way it is believed that the subject can be presented in a straightforward manner, without introducing the element of confusion which might otherwise arise.

The author's aim will have been achieved, and his efforts fully rewarded, if the chapters which follow serve to assist the reader to obtain greater efficiency with his apparatus, to surmount the trivial difficulties which may have confronted him in the past, and to arrive at a better understanding of the principles of a science which holds so great a fascination for those who become its students.

CHAPTER I

AERIALS AND EARTHS

A. The Outdoor Aerial

1. *What is the best outdoor aerial for broadcast reception?*

This, of course, will largely be decided by circumstances. The best probably consists of a single conductor of No. 16 copper wire, which has a coating of enamel. Make it, if possible, 30 to 40 feet high and 60 to 70 feet long. If you cannot make it quite so high, then make it as high as you can. If one end can be made higher than the other, then do so.

Any stranded wire with an equivalent area will do equally well. Thus, one may use 7/22 (seven strands of No. 22 gauge wire), 7/20 or 3/18.

2. *What aerial should be used for long wavelength reception?*

In this case it is better to put up a two-wire aerial. Place the wires 4 or 5 feet apart, not only 1 or 2 feet. The latter will not be much better than a single wire.

3. *When not much room is available, what should be done?*

When a long, single-wire aerial cannot be erected, and one wishes to receive, in particular, short wavelength signals, such as broadcast transmissions, put up a two or three-wire aerial, but keep the wires well apart. They need not be parallel; they may

be spread out fan-wise, provided each has the *same* length.

4. *Have these aerials any directional properties?*

Not noticeably, and in any case other considerations are more important than this.

5. *What is the effect of nearby trees, outhouses, telegraph wires, etc.?*

If the aerial wire is close to any body which is earthed, such as trees, buildings, etc., the aerial resistance is considerably more than it would be were the trees, etc., removed. That is to say, signals will be much weaker, and what is equally important to those who have a valve receiver, and who, quite naturally, wish to make their choice of the various broadcast programmes, tuning is flat; that is, difficulty will be experienced in tuning-out the local station, whereas if the aerial were better situated, the difficulty would not be experienced.

In the case of telegraph wires, tram wires, or railway lines, or any electrical apparatus, such as the arc lamps of cinemas, etc., trouble is sooner or later experienced through noise.

The aerial may receive energy by induction, for instance, which affects the receiver in the same way as a signal, or currents may flow in the earth wire. Consequently noises are heard, which are annoying and jar one's nerves considerably.

6. *What is the remedy?*

The remedy is to erect the aerial so that it is held above all trees and outhouses, and, in particular, well away from all brickwork, roofs and gutters.

In the case of power lines, etc., run the aerial at right angles to them, or, where this is not convenient, at the largest possible angle.

One can do nothing to the aerial to prevent interference caused through electrical machinery, etc. It is better to use an indoor aerial, according to particulars given later, but this, of course, means a

FIG. 1.—An aerial insulator. (*Silvertown Co.*).

valve receiver, unless one lives quite close to a transmitting station (say five miles).

7. *Is aerial insulation important?*

It is not merely important, it is vital. The insulation needs most careful attention. Two large insulators may very well be used at each end. Small insulators of the egg type, for example, are not of much use. The leakage surface is too small.

Glass or porcelain insulators are satisfactory, but it is better to employ insulators which are designed

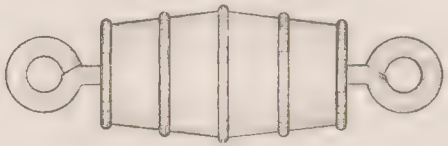

FIG. 1A.—Another useful type of aerial insulator.

so that a portion, at all events, remains dry in wet weather. Some have a cup-shaped piece which effectively protects the centre of the insulator from the rain. One of this type is illustrated in Fig. 1. It is made of rubber and cotton, and has a high electrical resistance as well as a long surface leakage path, so that its use, or the use of others of

this type, is especially to be recommended. The method of connecting insulators is shown in Fig. 2.

B. The Lead-in

1. *Are there any important points in connection with the lead-in?*

The lead-in should be taken from one *end* of the

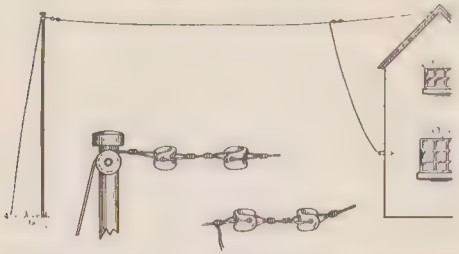

FIG. 2.—Showing the construction of a single-wire aerial.

elevated aerial wire, as shown in Fig. 2. Keep it well away from roofs, walls, etc., and connect the lower end to the terminal of a lead-in tube.

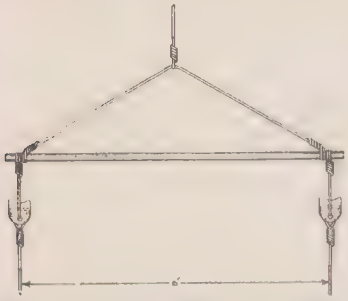

FIG. 2A.—How to build a two-wire aerial.

If it is decided to use a T-type aerial, on account of space difficulties, the lead-in wire should be taken from the precise centre of the elevated wire. Actually it should be taken from the electrical centre, but this will in general be the mechanical centre of the elevated wire as determined by measurement.

2. *The lead-in insulator.*

The lead-in insulator needs careful choosing, otherwise it will be the seat of serious signal-reducing losses. It should consist of a good insulator, such as ebonite or porcelain, of large diameter, through the centre of which is a hole. A metal rod passes from end to end, and is provided with nuts and washers, so that the lead-in wire may be fastened to

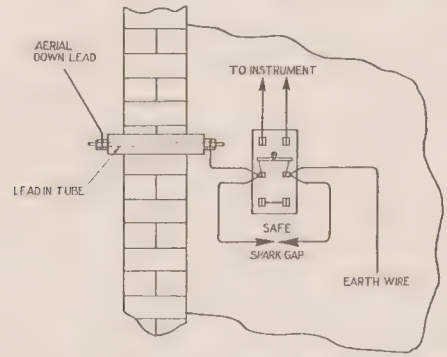

FIG. 3.—The lead-in tube and safety switch with spark gap.

one end of the rod. The instrument connection is taken from the other end (see Fig. 3).

3. *Is it necessary to use an insulated lead-in wire?*

The lead-in wire need not have an insulating covering from the point where it leaves the elevated wire to where it joins the lead-in insulator terminal.

The inside wire which connects between the instrument and the other terminal of the lead-in insulator, should, however, be insulated. Be careful to make it as short as possible, and hang it away from walls, otherwise the signal strength may be reduced.

The instrument should, when possible, be located

close to the point of lead-in. Signals may be appreciably reduced in strength when a long lead, hung close to walls, is used.

C. The Earth

1. If there is no earth, one will probably hear no signals at all, unless, of course, one has a powerful valve receiver.

A good earth connection may be made by connecting the earth wire to the *mains* side of the house water supply. It is often of little good connecting a wire to the tap. That should not be considered a real earth at all.

The connection should be well soldered. When this is not possible, use two or three good earthing clips, which may be obtained for a few pence, and fasten them to the main water-pipe after it has been well cleaned.

Rust and dirt are practically non-conductors of electricity, and if the pipe is not well cleaned, one really ought not to expect to receive any signals of reasonable strength. It is better to solder the wire to the clips.

2. *Should the earth wire be insulated?*

The earth wire itself should preferably be insulated from the point where it leaves the instrument to where it connects with the earth proper. No. 7/22, 7/20, or 3/18 wire is satisfactory.

The aim should be to make a good big earth connection, making the area of contact between the earth wire and the pipe as large as possible. In this way resistance is reduced, consequently signals are louder and tuning is easier.

Gas-pipes should not be used under any circumstances.

3. *Building a good earth.*

If the water-pipe has a long run to ground it will be better to build an earth. Use, for example, a sheet of galvanised iron, about 2 feet 6 inches wide by 4 feet long, and solder the earth wire to it in several places. Such sheets are used for roofing temporary buildings and sheds. The iron plate should be buried about 2 or 3 feet in moist earth.

Always make the connection which joins the

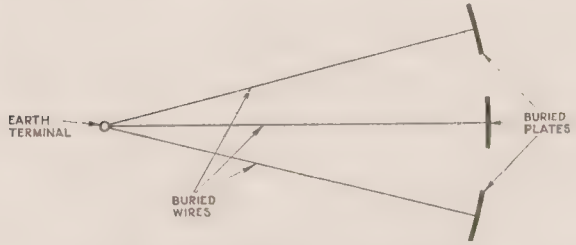

FIG. 4.—The layout of a good earth.

instrument with the actual earth as short as convenient.

4. *Are several earth connections better than one?*

They are probably not unless they are made with the idea of electrical symmetry in mind. That is to say, signals will, in all probability, be very much weaker if wires are taken from the earth terminal of the receiver to (let us say) the water-pipe, gas-pipe, and a buried sheet of iron.

If one feels inclined to build a thoroughly reliable earthing system, it is a good plan to run several wires from a central point to metal plates. Thus, referring to Fig. 4, three bare copper wires are shown buried about 18 inches in the ground, running from a single terminal. Each has the same length, and at its

ends a metal plate—of copper or galvanised iron—is properly soldered. The plates may be buried vertically, so that their top edges are just below the ground.

Try and make the earth symmetrical with the aerial if this is at all possible.

This sort of earth is the one generally used in conjunction with a transmitter, because it has a low resistance and is not very difficult or expensive to construct.

D. The Counterpoise

In some cases it is not convenient to make an earth connection, for example, when the receiver is to be installed in an upper room. In addition, an earth may not be very effective, on account of the long length of the earth wire.

A counterpoise may in these circumstance be built. It consists of two or three wires strung on insulators below the aerial wire itself. It may be regarded as a sort of second aerial, which is, however, supported between the ground and the aerial wire ; and the same care should be taken as with the aerial.

A counterpoise is often used at transmitting stations, and may be employed in addition to the ordinary earth. There is no need, of course, to use this combination if it is desired to receive signals only.

Apart from the question of convenience, however, when noises are heard in the telephones owing to electric currents which are picked up by the earth connection (due, perhaps, to nearby tram lines) it is often found that if the earth is removed,

and a counterpoise used in its place, no noises are heard.

A counterpoise is connected to the receiver in place of the usual earth wire.

E. Frame Aerials

1. *What is a frame aerial, and what is its best size for short wavelength work?*

A frame aerial, as suggested by the name, consists of a wooden frame, or its equivalent, around which is wound several turns of wire. The turns of wire are each carefully insulated. One type of frame aerial is illustrated in Fig. 5.

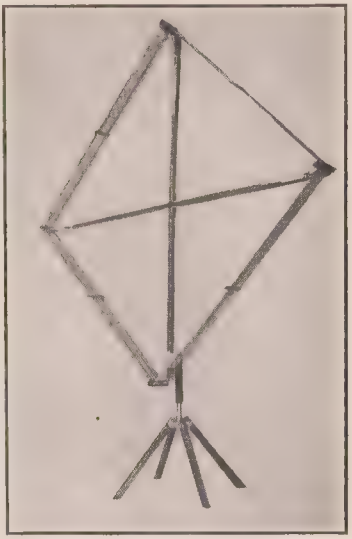

FIG. 5.—A frame aerial. (*Holworthy Patents, Ltd.*).

For a given wavelength, it has been found, there is one best size for the frame (which, for convenience, is generally square) and spacing of the turns of wire: that is, there is one best way of winding the turns corresponding with various wavelengths. These characteristics are given in the table below.

When building a frame aerial, try to make it so that its natural wavelength is almost equal to the shortest wavelength signal it is desired to receive.

DATA OF FRAME AERIALS*

Length of a side of the square frame. Feet.	Number of turns.	Best space between wires in inches.	Inductance. Micro-henries.	Self-capacity. Micro-micro-farads.	Natural wave-length metres.
8	3	½ inch	96	75	160
6	4	¼ ,,	124	66	170
4	6	¼ ,,	154	55	174
3	8	⅛ ,,	193	49	183

COIL FIVE FEET SQUARE.

Spacing ½ inch between turns.

		Metres.
4 turns	tuned with variable condenser of 0·00065 microfarad capacity give wavelength ranges of	200— 400
8 ,,		350— 700
16 ,,		500—1,000

COIL FIVE FEET SQUARE.

Spacing as before.

		Metres.
4 turns	tuned with variable condenser of 0·0014 microfarad capacity give wavelength ranges of	380— 650
8 ,,		400— 950
16 ,,		675—2,300

COIL FOUR FEET SQUARE.

Spacing ½ inch, wire = No. 20 D.C.C. Copper.

Number of turns.	Condenser capacity—Microfarads. 0·00005	0·0001	0·0005	0·001	
1	—	65	128	178	Wave-length in metres.
3	130	155	290	400	
6	230	280	500	710	
12	430	490	920	1,250	
24	760	880	1,600	2,100	

*Circular No. 40, Bureau of Standards, Washington, U.S.A.

2. *Will a frame aerial satisfactorily operate a crystal receiver?*

A frame aerial will not operate a crystal receiver unless the receiving outfit is located within a few miles—say five—of a broadcast station. It is necessary (except in the above case), to use at least one stage of high-frequency amplification. Many use a frame aerial with such single valve-circuits as a regenerative detector valve, the Flewelling circuit, the super-regenerative receiver in its original or in one of its modified forms, and in fact, any receiver which is capable of generating oscillations in the aerial circuit.

There is generally no need to connect one side of the frame to earth, but the connection should be tried.

3. *Has a frame aerial directional properties?*

A frame aerial certainly has very decided directional properties, and full advantage should be taken of them by mounting the frame on a support so that it may be easily rotated.

A frame aerial is used in direction-finding work—with specially designed apparatus, of course, and its directional characteristics are well marked.

F. Indoor Aerials

1. *When an outdoor aerial cannot be erected, what is the alternative to a frame aerial?*

One may make use of the electric lighting wires, by removing a lamp from its socket and inserting a special attachment, such as the "Ducon."* This consists of a pair of well-made condensers fitted into a suitable containing case for convenient use (see Fig. 6).

* Dubilier Condenser Company.

The only way to determine whether an attachment of this sort will give satisfactory results is by trial.

There are several ways of connecting the receiver with a "Ducon," and the instructions which are given with this attachment should be carefully followed. There is no need for a repetition here.

FIG. 6.—When the electric light wires are used as an aerial a connector of this sort is fitted to a lamp socket. (*Dubilier Condenser Co.*)

2. Many use an indoor aerial which consists of an insulated wire suspended from insulators fastened to the picture rail; or an aerial is constructed in the same way as an outdoor aerial, and suspended eighteen inches or so from the ceiling.

Such arrangements suffice when one is situated close to a broadcast station, or possesses a valve receiver. With the same receiving equipment, and an outdoor aerial, results would, of course, be many times better.

G. Protection

1. *Is it likely that damage will be done through the aerial receiving a charge as the result of lightning?*

Provided a proper lightning protector is used, no one should suffer damage as the result of the aerial receiving a charge.

A throw-over switch should be connected so that when the receiver is not in use the aerial is connected directly to the earth. Obviously, the switch

should be fitted outside the building if at all convenient; if not, it should be placed immediately inside at the point where the lead-in enters.

It is also essential to have a lightning protector, or a spark gap, joined between aerial and earth, so that in the event of the aerial receiving a charge while the receiver is in use, it will jump across the gap and go to earth, instead of possibly damaging the receiver. The points of the spark gap may be fixed one thirty-second, or so, of an inch apart.

2. It has been reported that a fire was started through the aerial receiving a charge during a storm. The earthing switch was located close to the instrument. The discharge made the connecting wires red-hot, and as these were laid around the room, as one would expect, a fire started. If the switch had been fitted close to the lead-in, this exceptional discharge would have been safely conducted to earth.

The method of connecting a throw-over switch to conveniently connect the aerial and earth to the instrument, or with each other, and the connections of the spark gap, are shown in Fig. 3.

CHAPTER II

TUNERS AND COUPLINGS

A. The Tuner

1. *What is the object of a tuner ?*

The object of the tuner is to enable the operator to alter the characteristics of the circuit so that it will most readily respond to the signals desired ; and further (and this is just as important) so that signals which are *not* wanted shall not be received.

2. *How does one tune ?*

By changing the values of the capacity and inductance in the circuit. Condensers possess capacity and coils inductance. Therefore we employ a coil and/or a condenser which has variable inductance or capacity.

For any given signal frequency (or wavelength which is equal to $\frac{300{,}000{,}000}{\text{frequency}}$), the product of the capacity and inductance in the circuit which will best respond, or tune, to that signal is a fixed quantity. Values of the product of capacity C in microfarads (μF.), and inductance L in microhenries (μH.), corresponding with various wavelengths λ, and frequencies f, are given in the table below.

WAVELENGTH TABLE

TABLE SHOWING THE RELATION BETWEEN WAVELENGTH, FREQUENCY, AND THE PRODUCT OF INDUCTANCE AND CAPACITY.

λ Wavelength metres	f (Multiply values below by 1000)	LC C in μF. L in μH.	λ Wavelength metres	f (Multiply values below by 1000)	LC C in μF. L in μH.
50	6000	0·000704	290	1035	0·02366
80	3750	0·001801	295	1017	0·02450
90	3333	0·002280	300	1000	0·02533
100	3000	0·002816	310	968	0·02705
120	2500	0·00405	320	938	0·02883
140	2144	0·00552	330	909	0·03066
150	2000	0·00634	340	882	0·03255
160	1875	0·00720	350	857	0·03448
170	1765	0·00813	360	833	0·03648
180	1667	0·00912	370	811	0·03854
190	1579	0·01016	380	790	0·0407
200	1500	0·01126	390	769	0·0428
210	1429	0·01241	400	750	0·0450
220	1364	0·01362	410	732	0·0473
230	1304	0·01489	420	714	0·0497
240	1250	0·01622	430	698	0·0520
245	1225	0·01690	440	682	0·0545
250	1200	0·01760	450	667	0·0570
255	1177	0·01831	460	652	0·0596
260	1154	0·01903	470	638	0·0623
265	1132	0·01977	480	625	0·0648
270	1111	0·02052	490	612	0·0676
275	1091	0·02129	500	600	0·0704
280	1071	0·02207	510	588	0·0733
285	1053	0·02287	520	577	0·0760

WAVELENGTH TABLE—*continued.*

λ Wave-length metres.	*f* (Multiply values below by 1000).	*LC* *C* in μF. *L* in μH.	λ Wave-length metres	*f* (Multiply values below by 1000).	*LC* *C* in μF. *L* in μH.
530	566	0·0790	820	365·9	0·1893
540	556	0·0821	830	361·4	0·1940
550	545	0·0852	840	357·1	0·1985
560	536	0·0884	850	352·9	0·2034
570	526	0·0914	860	348·8	0·2082
580	517	0·0947	870	344·8	0·2132
590	509	0·0980	880	340·9	0·2179
600	500	0·1014	890	337·1	0·2229
610	492	0·1047	900	333·3	0·2280
620	484	0·1082	910	329·7	0·2332
630	476	0·1117	920	326·1	0·2381
640	469	0·1154	930	322·6	0·2434
650	462	0·1188	940	319·1	0·2487
660	455	0·1225	950	315·8	0·2541
670	448	0·1263	960	312·5	0·2595
680	441	0·1302	970	309·3	0·2647
690	435	0·1341	980	306·1	0·2704
700	429	0·1378	990	303·0	0·2759
710	423	0·1419	1000	300·0	0·2816
720	417	0·1459	1050	285·7	0·3105
730	411	0·1500	1100	272·7	0·3404
740	405	0·1540	1150	260·9	0·3721
750	400	0·1583	1200	250·0	0·405
760	394·8	0·1626	1250	240·0	0·440
770	389·6	0·1668	1300	230·8	0·476
780	384·6	0·1714	1350	222·2	0·513
790	379·8	0·1756	1400	214·4	0·552
800	375·0	0·1801	1450	206·9	0·592
810	370·4	0·1847	1500	200·0	0·634

WAVELENGTH TABLE—*continued.*

λ Wave-length metres.	f (Multiply values below by 1000).	LC C in μF. L in μH.	λ Wave-length metres.	f (Multiply values below by 1000).	LC C in μF. L in μH.
1550	193·5	0·676	2500	120·0	1·760
1600	187·5	0·720	2550	117·7	1·831
1650	181·8	0·766	2600	115·4	1·903
1700	176·5	0·813	2650	113·2	1·977
1750	171·4	0·862	2700	111·1	2·052
1800	166·7	0·912	2750	109·1	2·129
1850	162·2	0·963	2800	107·1	2·207
1900	157·9	1·016	2850	105·3	2·287
1950	153·8	1·071	2900	103·5	2·366
2000	150·0	1·126	2950	101·7	2·450
2050	146·3	1·183	3000	100·0	2·533
2100	142·9	1·241	3500	85·7	3·448
2150	139·5	1·301	4000	75·0	4·500
2200	136·4	1·362	4500	66·7	5·700
2250	133·3	1·425	5000	60·0	7·040
2300	130·4	1·489	5500	54·5	8·520
2350	127·7	1·555	6000	50·0	10·140
2400	125·0	1·622	6500	46·2	11·880
2450	122·5	1·690	7000	42·9	13·780

The product of capacity and inductance is referred to as the *LC* value.

To show the use of this table, examples are given.

Example 1.—Suppose we have a coil with an inductance of 400 microhenries (the method of obtaining the inductance of a coil is given later),

and we wish to tune to 490 metres. What is the capacity of the condenser required ?

Referring to the table, corresponding with a wavelength, λ, of 490 metres is an LC value of 0·0676. Therefore the condenser required must have a capacity of $\frac{0{\cdot}0676}{400} = 0{\cdot}00017$ microfarad.

Example 2.—Suppose the condenser has a capacity of 0·001 μF., and we wish to tune to 1,000 metres. What is the inductance of the coil required ?

Referring to the table, corresponding with a wavelength, λ, of 1,000 metres is an LC value of 0·2816. Therefore the coil required must have an inductance of $\frac{0{\cdot}2816}{0{\cdot}001} = 281{\cdot}6$ μH.

3. *Does a circuit possess other properties besides capacity and inductance ?*

A circuit has resistance as well. The effect of resistance is to reduce signal strength, and to permit interfering signals to flow in the circuit along with the desired signal.

The latter statement means that tuning is broad, which is, of course, the reverse of sharp tuning. Tuning is sharp when a slight change in the circuit constants from the proper value of inductance and capacity, as determined from the table for a given wavelength, causes the signal to disappear.

Therefore when sharp tuning is required, and it is required by those who wish to have a choice of broadcast programmes, resistance must be cut down.

Condensers and coils possess resistance, the magnitude of which may be reduced by proper design. This point will be dealt with when dealing with the construction of the coils and condensers.

B. Single-Circuit Tuners

(1) *Common types of single-circuit tuner.*

There are quite a number of types, some of which make use of variable inductances and fixed condensers, and others which make use of a fixed or variable inductance coil and a variable condenser.

(2) *The tapped coil, and its construction for broadcast reception.*

The simplest form of tuner has one inductance coil which is provided with two sets of tappings, one for rough tuning and the other for fine tuning.

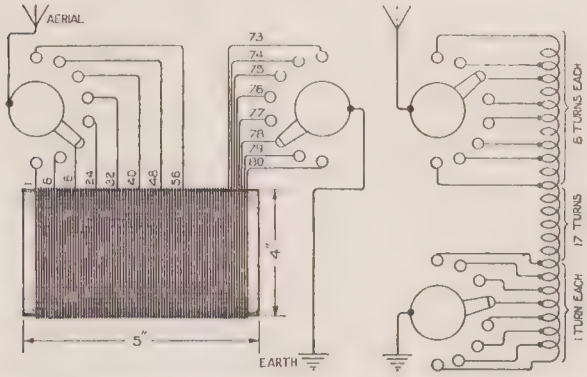

FIG. 7.—A simple tuning coil provided with a set of tappings for rough tuning, and another set for fine tuning.

The arrangement is shown in Fig. 7. The left-hand portion of the figure shows the coil connected to the aerial and earth, and the arrangement of the switches. The right-hand figure shows the method of representing the tuner in the usual diagram.

The aerial circuit is roughly tuned by means of the group turns switch, and fine adjustment is

obtained through the use of the single turn switch. No variable condenser is necessary with this arrangement.

To sharpen up the tuning with this tuner it is sometimes advisable to connect a small fixed condenser with a capacity of about ·0002 or ·0003 microfarad in series with the aerial circuit. A coil built according to the particulars given in the figure will tune up to about 600 metres. If it is desired to tune in longer wavelength signals, a loading coil must be connected. This is simply connected between the tuning coil and the earth lead, and may be a coil of any description, such as a basket coil.

For broadcast reception, the coil may be 5 inches long and 4 inches in diameter, wound with copper wire, No. 22 gauge, double cotton covered (No. 22 D.C.C.). There are 80 turns in all. Tappings are taken from the following turns to the "rough tuning" switch—1, 8, 16, 24, 32, 40, 48, 56, and from turns 73, 74, 75, 76, 77, 78, 79 and 80 to the "fine tuning" switch. This is clearly shown in the diagrams.

The connections should be carefully soldered to the contact studs.

C. The Variometer, its Size and Construction

A better method of tuning from both a mechanical and electrical point of view, if one wishes to receive broadcast signals only, is to include a variometer in the circuit. A variometer consists simply of a fixed coil, inside of which is mounted, so as to be free to rotate, another coil. Both coils are connected together—generally in series, but sometimes in parallel.

The inductance will be smaller when the coils are connected in parallel, therefore this connection should

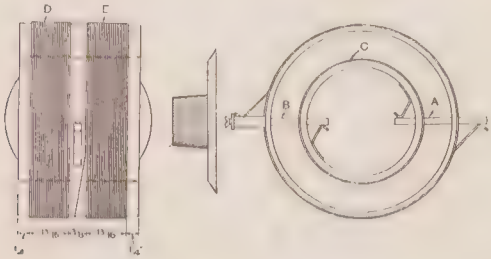

FIG. 8A.—Construction of a variometer.

only be made when the variometer coils are too big to enable one to comfortably tune down to the wavelength of the signal it is desired to receive.

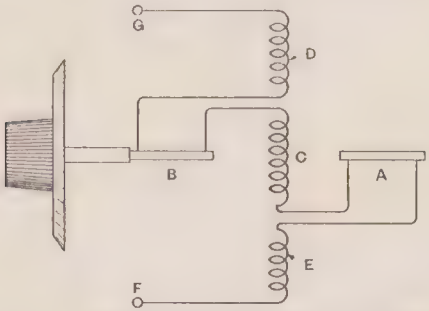

FIG. 8B.—Method of connecting the windings.

A variometer is shown in Figs. 8A, 8B and 8C, and its construction should be noted. The inner coil, called the rotor because it may be rotated, is mounted on spindles, one on each side. These also serve as contacts for making connection between the moving coil and the fixed coil. In the construction illus-

trated, springs are shown bearing against the spindles, and these make rubbing contacts.

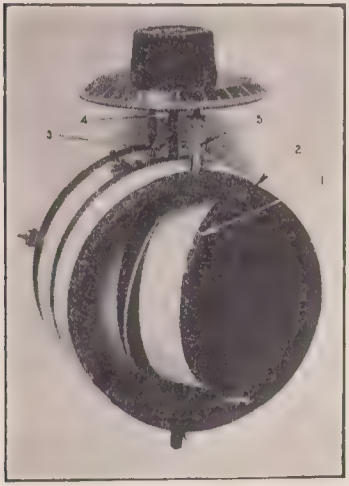

FIG. 8C.—The finished instrument. (*Bowyer-Lowe Co.*)

The rotor is marked 1, the stator 2, fixing pillars 5, spring contact 3, spindle 4.

One end of the rotor *C* is joined with one spindle *B*, and the other end is joined with the second spindle *A*. The fixed winding is wound in two parts, *D* and *E*, to allow the spindles to pass through the former without rubbing the wire of the coil. The two inside ends of this outer winding are connected with the springs, so that the inner and outer coils are in series. The two outer ends of the fixed coil, *F* and *G*, are connected to the circuit.

A variometer for broadcasting may have the following dimensions : Outer tube, 4 inches diameter, $2\frac{1}{2}$ inches long ; inner tube, $2\frac{1}{2}$ inches diameter and $2\frac{1}{2}$ inches long. Wind with No. 24 D.C.C. When winding, start $\frac{1}{4}$ inch from one end, leave a space of $\frac{3}{8}$ inch in the middle, and finish $\frac{1}{4}$ inch from the other end.

Formers may be purchased, with the spindles already fitted, quite cheaply. The knob and dial are, of course, fastened to the end of the spindle

for the purpose of moving the rotor, and indicating its position relative to the fixed coil.

4. As before, signals are very often increased in strength and the tuning is made sharper, if a small fixed condenser is connected in series with the aerial circuit.

D. Tuning with a Fixed Coil and Variable Condenser

1. Many experimenters prefer to use a fixed coil, and to tune it with a variable condenser. The coil is generally provided with a plug, so that it may be fitted into a socket. If a number of these plug-in coils are to hand, one is easily able to change the tuning range of the tuner by inserting a coil having the necessary inductance value.

There are many types of plug-in coil, called, in general, by well-known names. The basket type of coil is a favourite, and one is illustrated in Fig. 9.

FIG. 9.—A home-made basket coil.

2. *How are basket coils constructed?*

There are two general methods of making basket coils. We may use a peg former or a cardboard disc.

The peg former consists of a cylinder of wood or metal, about 4 inches long by 2 inches diameter. In a row around the circumference is placed a number of pegs (nails, etc., or properly screwed lengths of brass rod) which have a diameter of about $\frac{3}{32}$ inch. It is usual to employ an odd number, such as fifteen or seventeen.

The card former is constructed as follows : Draw two circles with diameters, for example, of 2 inches and 4 inches, and divide the circumference into an odd number of parts, such as fifteen or seventeen. Then cut slots around the edge of the card about $\frac{3}{32}$ inch wide. They will be 1 inch long when the circles which were drawn have diameters of 2 inches

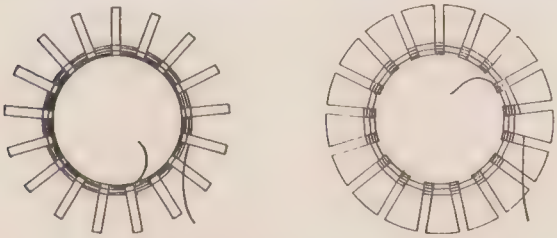

FIG. 10A.—Illustrating the construction of basket coils.

and 4 inches respectively. The construction of suitable formers is shown in Figs. 10A and B.

To wind, one end of the wire, which must not be too coarse, is fixed, and the wire is wound through one space, around the back of the former to the next space ; now it is passed through this space towards the front of the former, and so on.

The figure 10A will make the method of winding quite clear. No. 24 or No. 26 D.C.C. wire is convenient to use. When the coil is wound, it is sometimes dipped in melted wax. If so, the coil should be well shaken to throw out all superfluous wax. Instead of soaking with wax it is better to tie the turns of the coil with cotton.

In the case of the peg former, when the winding is finished the pegs are withdrawn and the coil taken from the former. When a cardboard former is

used, the cardboard is retained, and serves to give strength to the finished coil so that it is not easily damaged in use.

These coils are mounted by fixing them to plugs. A number of methods will occur to the reader.

A number of coils of this description, having 40, 60, 90, 120 and 150 turns of No. 26 D.C.C., should be

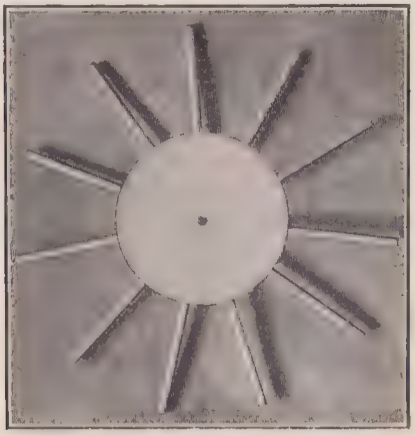

FIG. 108.—A basket coil peg type former.

wound for use in tuners designed for broadcast reception.

3. *What capacity tuning condenser should be connected in the aerial circuit?*

Those who are interested mainly in broadcast reception should use one having a maximum value of 0·0005 microfarad. This value may be increased up to about 0·001 microfarad without harmful results.

The condenser may be joined across the coil or

between the coil and the aerial. Sometimes best results are obtained with one connection and sometimes with the other. A definite statement cannot be made, because a good deal depends upon the constants of the aerial circuit.

4. *Plug-in coils.*

When a plug-in type of coil is used in a coil holder, which coil should be used for the reception of British broadcast, Continental stations, etc. ?

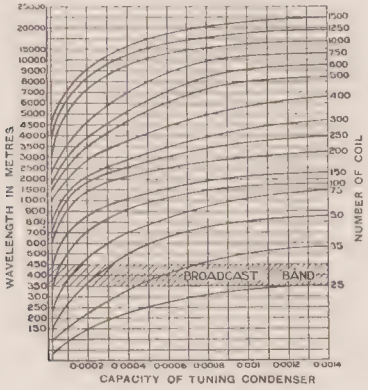

FIG. 11.—Tuning chart.

A tuning chart is given in Fig. 11, and a list of the coils more commonly employed is given in the table below. Igranic plug-in coils are referred to, and with these coils it should be noted that the number of the coil corresponds with the number of turns actually used in the winding; thus a No. 25 coil has twenty-five turns. The inside diameter of these coils is about 2 inches, and the width 1 inch in the smaller coils, and a little over 1 inch in the larger coils. They are

wound with No. 22 D.C.C. for the smaller sizes, and No. 26 D.C.C. for the intermediate sizes, while the larger coils are wound with No. 28 and No. 30 D.C.C., or with enamel-covered wire.

FIG. 12. A plug-in coil. (*Igranic Electric Co.*)

A photograph of an Igranic plug-in coil is given in Fig. 12.

Example.—Suppose we wish to tune in a signal whose wavelength is 1,500 metres. What Igranic coils may be used when the tuning condenser has a maximum value of 0·0005 microfarad?

Referring to the tuning chart, look along the line marked 1,500 metres. Also look along the vertical line marked 0·0005 microfarad. The curve marked No. of Coil, 150, is just below where the two lines meet, therefore this coil is a little too small. We may, however, use a No. 200 coil. We shall then not use the whole of the capacity of the variable condenser; only two-fifths of the maximum capacity is necessary. The condenser will therefore be set at roughly two-fifths of the 180° marked on the condenser dial, that is, 72°.

The table below will be helpful when choosing a tuning coil, and is reprinted from a leaflet supplied by the Igranic Electric Co., Ltd.

The advantage of using plug-in type coils of any

description lies in their small dimensions, and their interchangeability.

HONEYCOMB INDUCTANCE COILS (PLUG-IN TYPE)

The under-mentioned stations may be received by using the following combinations of coils with a P.M.G. standard aerial, the primary shunted by a condenser of 0·001 μF. capacity, and the tuned anode and secondary by one of 0·0005 μF.

Broadcasting station.	Primary.	Secondary or tuned anode.	Reaction.
British Broadcasting—			
Lower wavelength . .	25	50	75
Higher wavelength. .	35	75	100
Radiola, 1,780 metres .	150	200	150
Hague, 1,050 metres . .	75	150	100
Eiffel Tower, 2,600 metres .	200	300	200
Koenigswusterhausen, 2,800 metres	200	300	200

When the primary is shunted by a condenser of 0·0005 μF. and the tuned anode by one of 0·0002 μF. the following coils will be required :—

British Broadcasting—			
Lower wavelength . .	35	75	100
Higher wavelength. .	50	75	100
Radiola, 1,780 metres .	200	400	150
Hague, 1,050 metres . .	100	250	150
Eiffel Tower, 2,600 metres .	300	500	200
Koenigswusterhausen, 2,800 metres	300	500	200

The above figures will be found correct in almost all cases, though local and other conditions may cause some slight variations therefrom.

E. Switching

The method of connecting the condenser C so that it may be joined in series or in parallel with a tapped coil L is shown in Figs. 13A and B. The

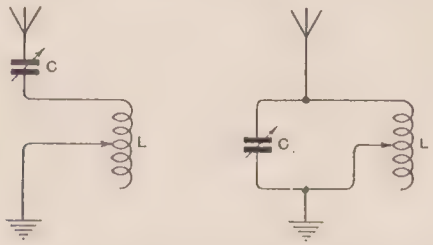

FIG. 13A.—In the left-hand figure the condenser C is in series with the coil L; in the right-hand figure it is in parallel.

switch used has two positions. When the contacts on the left are joined with the centre contacts the variable condenser is in series with the tapped coil. When the centre contacts and the right-hand contacts are connected together the condenser is joined across the coil. The coil may be 4 inches in diameter and 5 inches long, wound with No. 20 D.C.C. with ten

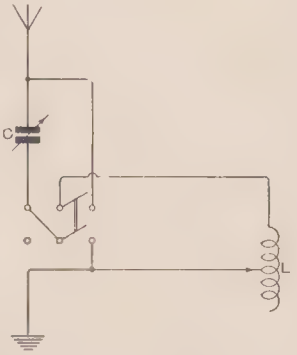

FIG. 13B.—Connections of a throw-over switch for connecting the condenser C in series or parallel with the coil L.

tappings for broadcast reception. The tappings may be equally spaced along the winding.

One should always try whether signals are stronger with the condenser in series or in parallel with the tuning coil.

The method of connecting the variable condenser is the same whatever sort of coil is used.

F. Coupled Circuits

1. *What is the object of using a secondary circuit?*

The object of coupling a secondary circuit with the aerial circuit is to enable one to obtain selectivity, and very often increased signal strength. The coupling should in most cases be variable to obtain the best results. It should be remembered, however, that great selectivity is generally obtained at the expense of a reduction in signal strength. For this reason very careful adjustment of the tuning of the closed and aerial circuits has to be made, as well as adjustment of the coupling.

2. *What is a loose coupler?*

A loose coupler consists, in general, of two coils, one being smaller than the other, so that it may be moved in or out of the larger coil. The outer coil may be tapped as before and tuned with a variable condenser. The secondary coil may also be tapped, and is tuned with a smaller variable condenser. One type of loose coupler is shown in Fig. 14. If the aerial condenser has a maximum value of between 0·001 μF. and 0·0005 μF., then the closed circuit condenser should have a maximum value of between 0·0005 μF. and 0·00025 μF. It is sometimes found an advantage to use the smaller values, and those who

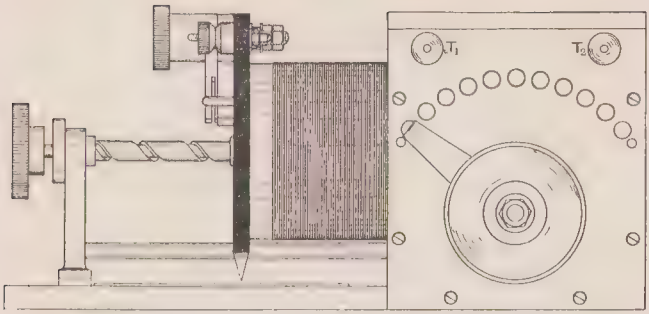

FIG. 14.—A loose coupler. The primary coil is inside the box, and is tapped, the tappings being brought to the contact studs. The connections are made at T_1 and T_2. The secondary coil may be moved in or out of the large coil by turning the handle seen on the left. This coil is also tapped. (*H. W. Sullivan, Ltd.*)

wish to tune in short wavelength signals only will find it very satisfactory if they use a 0·0005 μF. variable

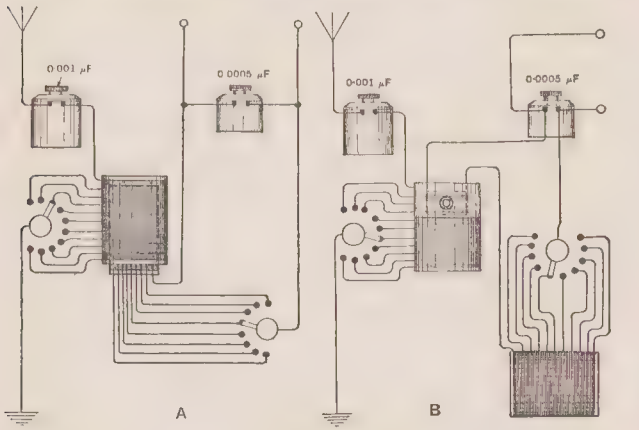

FIG. 15A and B.—The left-hand figure shows the method of connecting tuning condensers to the aerial and secondary coils of a loose coupler. The right-hand figure shows a vario-coupler, with a separate secondary tuning coil.

condenser in the aerial circuit and a 0·00025 μF. in the closed circuit. The connections are given in Fig. 15A. Here the aerial condenser is connected in series, although it may of course be connected in parallel, as shown in Fig. 13.

The aerial coil may be as before—namely, 4 inches in diameter and 5 inches long, wound full of No. 20 D.C.C. with 10 tappings. The secondary circuit coil should then be $3\frac{1}{2}$ inches diameter and 5 inches long, wound full of No. 26 D.C.C. with 10 tappings spaced equally apart.

3. *How is a vario-coupler used ?*

The method of connecting a vario-coupler is shown in Fig. 15B. The larger coil is connected in the aerial circuit, and, as it is provided with tappings, fine tuning may be obtained with the aid of a variable condenser. The secondary circuit is coupled through the moving coil of the vario-coupler with another tapped coil and a variable condenser. The larger secondary coil is mounted at right angles to the aerial coil so that there is no coupling between them.

The selectivity of an arrangement such as this is quite sufficient for all practical purposes. If the outer coil is 4 inches in diameter and 5 inches long, as it was before, the coupling coil may be $2\frac{1}{2}$ inches in diameter and 2 inches long, wound with 30 turns of No. 24 D.C.C. This coil is mounted at one end of the aerial coil. It will be noted it is mounted at that end to which the first tappings are taken, so that when only a small part of the aerial coil is in circuit, coupling is still obtained. A vario-coupler is illustrated in Fig. 16. Here 2 is the tapped primary winding, 3 a connection with the rotor 4, 5 the rotor

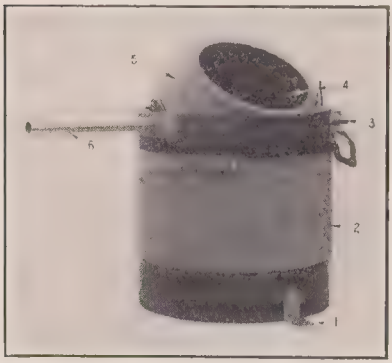

FIG. 16.—A vario-coupler, as used in the tuner of Fig. 15B. (*Igranic Electric Co.*)

winding, and 6 the spindle, to which is attached the knob and dial. The vario-coupler is fixed with screws at 1.

4. *Is it always necessary to use a tuned aerial circuit?*

When valve apparatus is used in the receiver it is not necessary to always tune the aerial circuit. A good arrangement, shown in Fig. 17A, consists in

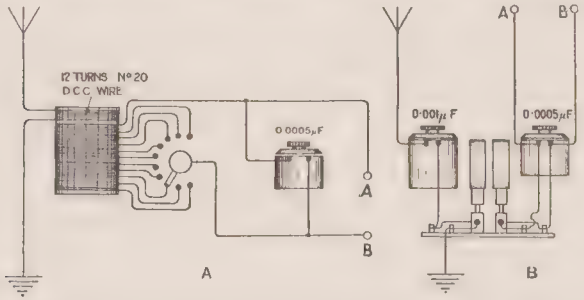

FIG. 17A and B.—The left-hand figure shows the connections when an untuned aerial circuit is used. The right-hand figure gives the method of connecting plug-in type coils.

using a tube 4 inches in diameter and 6 inches long ; the aerial winding may consist of 12 turns of No. 20 D.C.C., which is connected in series with the aerial. A space of ½ inch should be left between this winding and the second winding which is wound on this tube. The second winding is the closed circuit coil of the tuner, and may consist of a winding of No. 24 D.C.C. with 10 tappings about equally spaced.

5. *Coil holders.*

A convenient method of obtaining variable coupling is by using a coil holder ; one is illustrated

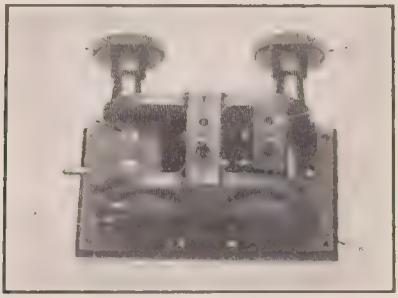

FIG. 18.—A three-coil holder. (*Burndept, Ltd.*)

in Fig. 18 They are made to accommodate two, or three plug-in coils. One coil holder is fixed in position and the others are movable. In the coil holder illustrated, 1 is a knob which operates the gear wheels, 7 and 6, which controls the coil holder 3. The centre holder, 4, is fixed. The holder 5 is movable through knob 2 and the gearing. The base 8 is provided with fixing holes. The method of connecting the coils in circuit is shown in Fig. 17B.

The correct size for the secondary coil may be

obtained from the tuning table and chart given above.

G. Faults

When tapped coils are used, it sometimes happens that a badly soldered wire falls off a contact stud. Be sure, therefore, that the soldering of connections is properly done. Breaks in the coil where the taps are taken off are sometimes found, especially when the tuner has been hurriedly made.

Contact studs should be clean and of even height, so that the switch arm makes good contact as it is passed over them.

Be careful not to leave soldering flux, such as fluxite, or pieces of solder, lying about on the wires or the coil. Signals will probably be very weak when the contacts are covered with flux. It is a good plan to scratch lines around the contact studs on the back of the panel to reduce surface leakage.

H. Connecting Condensers and Variometers

1. When the variable condenser is joined between the aerial terminal of the receiver and the coil, connect the fixed plates with the coil and the moving plates with the aerial. Always connect the moving plates to a point of fixed potential if at all possible.

2. Variometers and vario-couplers sometimes have the spindle connected to one side of the windings. This side of the winding should, whenever possible, be joined to a point of fixed potential, such as earth, the filament battery, or the positive terminal of the plate battery. Hand capacity effects are then minimised.

CHAPTER III

CONDENSERS AND COILS

A. Variable Condensers

A variable condenser consists of a set of fixed plates, and another set of moving plates. The moving plates are mounted upon a spindle which is

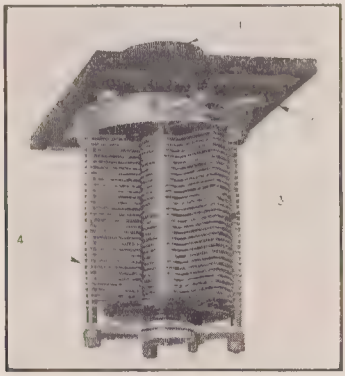

FIG. 19A.—A well-made variable condenser. The knob is marked 1, the top plate 2, moving plates 3, and fixed plates 4. (*Marconi Co.*)

carried in bearings, so that when rotated, a larger or smaller portion of the moving plates is interleaved with the fixed plates. Condensers are illustrated in Fig. 19A and B.

The capacity of the condenser is determined by the area and number of the plates which interleave,

and the distance between them. No allowance need be made for edge effect.

If we express the capacity in micro-microfarads ($\mu\mu$F.) and call the total number of plates N; the radius of the moving plates in centimetres R; the radius of the centre hole in the fixed plates in centimetres r; the thickness of the dielectric, that is, the distance between a fixed and a moving plate,

FIG. 19B.—The left-hand condenser has a knob 1, fixed plates 2, and moving plates 3. The right-hand condenser is a double condenser, and may be used to tune two similar circuits at the same time. The knob is 1, one set of fixed plates 2, and moving plates 3; and the other set of fixed plates 4, and moving plates 5. (*Marconi Scientific Instrument Co.*)

in centimetres t; then the maximum capacity of the variable condenser, that is, when the whole of the surface of the moving plates lies between the fixed plates, is as follows:

$$C\mu\mu F. = 0{\cdot}139 \frac{(N-1)(R^2 - r^2)}{t}$$

The value of the constant (0·139) is such that, instead of having to work out the area of the dielectric covered, the radii (R) and (r) may be used. The formulæ gives results accurate to within one-half per cent.

The above quantities are in centimetres, but for those who prefer to use the *inch* unit the formula may be re-written as follows :

$$C\mu\mu F. = 0{\cdot}353 \frac{(N-1)(R^2 - r^2)}{t}$$

where R, r and t are all in inches.

The distance between the fixed and moving plates t is equal to the thickness of a spacing washer in inches, less the thickness of a plate, the whole

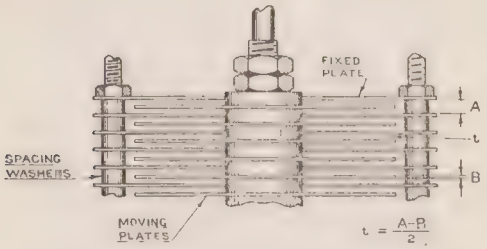

FIG. 20.—The quantities which should be known when finding the capacity of a variable condenser.

divided by 2. Thus, if the spacing washers are $\frac{1}{8}$ inch or 0·125 inch thick, and the moving plates are No. 20 gauge or 0·036 inch thick, the distance between the plates is $\frac{0{\cdot}125 - 0{\cdot}036}{2}$ inch, or 0·0445 inch (see Fig. 20).

The formula may be written in other ways. Thus, suppose we have plates of a given size, with spacing washers, and we wish to find how many plates will be required for a certain maximum capacity ; then the total number of plates

$$N = \frac{C\mu\mu F. \times t}{0{\cdot}353\,(R^2 - r^2)} + 1,$$

that is, the total number of plates required is obtained by multiplying the capacity and the distance between the fixed and moving plates, and dividing the result by the radius of the moving plates squared less the square of the radius of the hole in the fixed plate, all dimensions being in inches, and the capacity being expressed in $\mu\mu$F. One more plate is added to the number obtained.

If we wish to find the distance between the plates permissible when a certain capacity is required, and the plates have a given size,

$$t = 0{\cdot}353 \frac{(N - 1)(R^2 - r^2)}{C\mu\mu F.}$$

The thickness of the spacing washer is then twice this amount added to the thickness of the plates.

In the table is given the dimensions and number of plates required for various maximum capacities, to help those who wish to build condensers themselves.

As a matter of fact, the values calculated and those measured may differ by several per cent., simply on account of the difference in thickness of spacing washers, plates not lying true, etc., and the quantity r which appears in the formula may be omitted without risk of serious error. This, however, does not mean that the formula is inaccurate, but that condensers are not ordinarily built with the accuracy which the formula assumes.

Example.—If the moving plates of a condenser have a radius of 2 inches, the spacing washers are $\frac{1}{8}$ inch thick, and the plates 0·036 inch thick (= No. 20 S.W.G.), what is the maximum capacity of the condenser if there are 45 plates altogether ?

Now 1 μF. = 10^6 = 1,000,000 $\mu\mu$F.

$$\therefore C\mu F. = \frac{0{\cdot}353 \times (N - 1) \times R^2}{t \times 1{,}000{,}000}$$

$$N = 45 \therefore (N - 1) = 44$$

$$R = 2'' \therefore R^2 = 4$$

$$t = \frac{\text{thickness of spacing washer} - \text{thickness of plates}}{2}$$

$$= \frac{0{\cdot}125 - 0{\cdot}036}{2} = 0{\cdot}0445 \text{ inch.}$$

$$\text{Then, } C\mu F. = \frac{0{\cdot}353 \times 4 \times 44}{0{\cdot}0445 \times 1{,}000{,}000} = 0{\cdot}0014\ \mu F.$$

From the table the reader will be able to estimate the capacity of his variable condensers by comparing the dimensions of the plates, and the thickness of the spacing washers and moving plates.

TABLE SHOWING THE TOTAL NUMBER OF PLATES OF VARIOUS DIMENSIONS AS OBTAINED FROM WIRELESS DEALERS TO BE USED IN THE CONSTRUCTION OF VARIABLE CONDENSERS TO GIVE THE MAXIMUM CAPACITIES QUOTED.

Maximum capacity. Mfds.	Diameter of moving plate 2½". Spacing washer = 0·095" thick. Moving plate = 0·023" thick. Total number of plates.	Diameter of moving plate = 2 5/16". Spacing washer = 3/32" thick Moving plate = 0·036" thick. Total number of plates.	Diameter of moving plate = 4". Spacing washer = ⅛" thick. Moving plate = 0·036" thick. Total number of plates.	Diameter of moving plate 3½". Spacing washer = 0·1" thick. Moving plate 0·023" thick. Total number of plates.
0·001	65	65	33	41
0·0005	33	33	17	21
0·0002	13	13	7	9
0·0001	7	7	3	5

B. Fixed Condensers

In a fixed condenser we have one or more metal plates (copper foil generally) joined to one terminal, and another set joined to the other terminal, the two sets of plates being held apart with an insulator, called a dielectric. A fixed condenser is illustrated in Fig. 21.

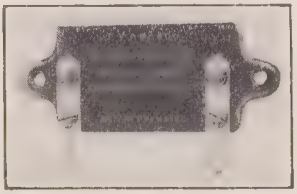

FIG. 21.—A fixed condenser. (*Dubilier Condenser Co.*)

The dielectric chosen is generally mica, because mica offers many advantages not possessed by other materials.

Using the centimetre unit, the capacity of a condenser in $\mu\mu$F. with N plates, the mica being t centimetres thick and having a specific inductive capacity of K (see *The Wireless World*, p. 78, April 21st, 1923), with metal plates overlapping by A square centimetres, is :

$$C\mu\mu F. = \frac{0{\cdot}0885\ KA(N-1)}{t}$$

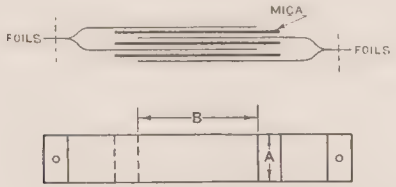

FIG. 22.—The quantities which should be known when finding the capacity of a fixed condenser.

Fig. 22 shows the dimensions which should be used in the formula.

Using the inch unit for the dimensions, the formula is as follows :

$$C\mu\mu F. = \frac{0{\cdot}225\ KA(N-1)}{t}$$

Where K = the dielectric constant of mica (varies from 5 to 8).
A = area of overlap of metal foils in square inches.
N = total number of foils.
t = thickness of mica.

The value of K varies according to the quality of the mica.

It is apparent that if one wishes to make a fixed condenser which shall have a capacity the same as its calculated capacity, the condenser must be very accurately made, from components of known dimensions and quality.

In the case of mica ordinarily purchased the value of K may be taken as 5·5, and its thickness as 0·002 inch.

The formula may then be simplified considerably. By putting in the above values it becomes

$$C\mu F. = 0{\cdot}00062\ A(N-1).$$

Example.—What is the capacity of a fixed condenser built of mica whose dielectric constant is 5·5, and which is 0·002 inch thick? the metal foils have an overlap of 1 square inch, and there are a total of three plates.

$$C\mu F. = 0{\cdot}00062 \times 1 \times 2.$$
$$= 0{\cdot}00124 \text{ microfarad.}$$

The table below has been worked out from the formula and should be helpful.

It will be noticed that if the thickness of the mica is doubled the capacity is halved, and so on. Also if the area of the metal foils is doubled the capacity is doubled.

TABLE SHOWING THE NUMBER OF PLATES AND THE AREA OF OVERLAP FOR VARIOUS FIXED CONDENSERS. MICA IS THE DIELECTRIC, 0·002″ THICK. ITS DIELECTRIC CONSTANT IS TAKEN AS 5·5.

Area in square inches.		Capacity in microfarads.				
		0·10	0·20	0·30	0·40	0·50
Number of plates.	2	0·000062	0·000124	0·000186	0·00025	0·00031
	3	0·000124	0·000248	0·000372	0·0005	0·00062
	4	0·000186	0·000372	0·000558	0·00075	0·00093
	5	0·000248	0·000496	0·000744	0·001	0·00124
	6	0·000310	0·000620	0·000930	0·00125	0·00155
	7	0·000372	0·000744	0·001116	0·0015	0·00186
	8	0·000434	0·000868	0·001302	0·00175	0·00217
	9	0·000496	0·000992	0·001488	0·0020	0·00248
	10	0·000558	0·001116	0·001674	0·00225	0·00279
	11	0·000620	0·001240	0·001860	0·0025	0·00310
	12	0·000682	0·001364	0·002046	0·00275	0·00341

TABLE SHOWING THE NUMBER OF PLATES AND THE AREA OF OVERLAP FOR VARIOUS FIXED CONDENSERS.—*continued.*

Area in square inches.		Capacity in microfarads.					
		0·60	0·80	1·0	2·0	4·0	6·0
Number of plates.	2	0·000372	0·000496	0·00062	0·00124	0·00248	0·00372
	3	0·000744	0·000992	0·00124	0·00248	0·00496	0·00744
	4	0·001116	0·001488	0·00186	0·00372	0·00744	0·01116
	5	0·001488	0·001984	0·00248	0·00496	0·00992	0·01488
	6	0·001860	0·00248	0·0031	0·00620	0·01240	0·01860
	7	0·002232	0·002976	0·00372	0·00744	0·01488	0·02232
	8	0·002604	0·003472	0·00434	0·00868	0·01736	0·02604
	9	0·002976	0·003968	0·00496	0·00992	0·01984	0·02976
	10	0·003348	0·004064	0·00558	0·01116	0·02232	0·03348
	11	0·00372	0·00496	0·0062	0·0124	0·0248	0·0372
	12	0·004092	0·005456	0·00682	0·01364	0·02728	0·04092

C. Cylindrical Coils

1. *The Inductance of Cylindrical Coils.*

There is a formula for finding the inductance of a cylindrical coil. The inductance L is in micro-henries $= \pi^2 D^2 n^2 l K \div 1000$.

$\pi = 3{\cdot}1416$.
D = the diameter of the coil in centimetres.
n = the number of turns per centimetre of winding.
l = the length of the coil in centimetres.
K = a factor which depends on the ratio of the diameter to the length of the coil.

Values of K are given in the table below.

NAGAOKA'S FACTOR FOR THE INDUCTANCE OF A SINGLE LAYER COIL.

$\frac{D}{l}$	K	$\frac{D}{l}$	K
·00	1·000	·28	·8909
·02	·9916	·30	·8838
·04	·9832	·32	·8768
·06	·9750	·34	·8699
·08	·9668	·36	·8632
·10	·9588	·38	·8565
·12	·9509	·40	·8499
·14	·9430	·42	·8433
·16	·9353	·45	·8337
·18	·9276	·50	·8181
·20	·9201	·55	·8031
·22	·9126	·60	·7885
·24	·9053	·65	·7745
·26	·8980	·70	·7609

NAGAOKA'S FACTOR.—*continued.*

$\frac{D}{l}$	K	$\frac{D}{l}$	K
·74	·7504	2·00	·5255
·76	·7452	2·2	·5025
·78	·7401	2·4	·4816
·80	·7351	2·6	·4626
·82	·7301	2·8	·4452
·84	·7252	3·0	·4292
·86	·7205	3·2	·4145
·88	·7157	3·4	·4008
·90	·7110	3·6	·3882
·92	·7063	3·8	·3764
·94	·7018	4·0	·3654
·96	·6972	4·2	·3551
·98	·6928	4·4	·3455
1·00	·6884	4·6	·3364
1·20	·6475	4·8	·3279
1·30	·6290	5·0	·3198
1·40	·6115	6·0	·2854
1·50	·5950	7·0	·2584
1·60	·5795	8·0	·2366
1·70	·5649	9·0	·2185
1·80	·5511	10	·2033
1·90	·5379		

This formula may also be applied to basket type coils. For the length l in the above formula put in the radial depth of the basket coil, and for the diameter D use the mean diameter of the basket coil. The number of turns per centimetre n is equal to the total number of turns in the basket coil divided by the radial depth.

The table below gives the inductance in use of a

cylindrical coil wound with ten turns per centimetre for coils with various diameters and lengths.

The two charts, Fig. 23 and Fig. 24, give the inductance in microhenries of coils of various diameters and lengths wound with No. 20 D.C.C. and No. 30 S.S.C.; lengths and diameters are expressed

INDUCTANCE OF A COIL WOUND WITH 10 TURNS PER CENTIMETRE.

DIAMETER IN CENTIMETRES.

Length in cms.	4	5	6	7	8	9
2	16·59	23·28	30·5	38·1	46·2	54·5
4	43·4	63·0	84·57	107·9	132·8	159·0
6	72·9	107·6	146·7	190·2	236·2	300·2
8	103·3	154·2	212·5	277·2	348·0	423·7
10	134·2	201·8	280·0	368·0	464·5	568·5
12	165·2	249·3	348·7	460·5	586·0	717·5
14	196·4	298·2	418·2	554·0	702·5	868·7
16	227·7	347·2	487·8	648·2	825·2	1023
18	259·0	395·7	557·8	743·0	950·0	1178
20	290·5	444·7	628·0	838·0	1074	1333

DIAMETER IN CENTIMETRES.

Length in cms.	10	12	14	16	18	—
2	63·1	81·12	99·7	119·5	139·7	—
4	186·3	243·5	305·2	369·5	436·0	—
6	337·5	448·2	567·5	698·7	823·7	—
8	504·0	676·7	863·5	1062	1278	—
10	679·5	920·2	1181	1464	1762	—
12	860·7	1175	1518	1886	2283	—
14	1046	1435	1862	2329	2822	—
16	1234	1701	2219	2785	3400	—
18	1424	1970	2577	3245	3962	—
20	1615	2241	2945	3715	4547	—

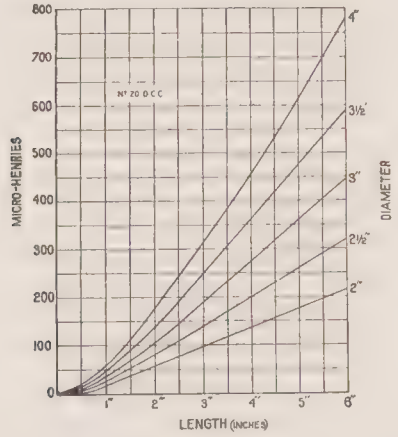

FIG. 23.—Curves giving the inductance of coils of various sizes wound with No. 20 D.C.C. wire.

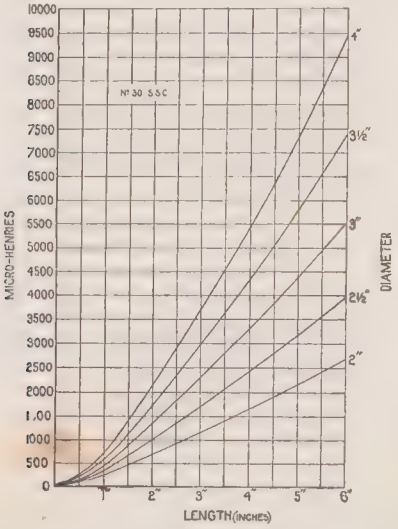

FIG. 24.—Curves giving the inductance of coils of various sizes wound with No. 30 S.S.C. wire.

in inches. To use these charts, suppose we have a coil 4 inches long and 3 inches in diameter, and it is wound with No. 20 D.C.C. From Fig. 23 is seen the inductance is 275 microhenries. Suppose the same size coil is wound with No. 30 S.S.C. Referring to Fig. 24, it is seen the inductance is 3,350 microhenries. The inductance values so obtained may be checked from the inductance formula given above.

D. Wavelength

1. We have now described how to find the inductance of a coil, and the capacities of fixed and variable condensers.

To design a tuner, which will tune to any given wavelength, it is only necessary to decide upon either the inductance of the coil or the capacity of the tuning condenser, then proceed as indicated in the paragraph A2, page 16, and find the required value of the other as explained on p. 19.

The wire table given on page 52 may be helpful. In the first column is the number of the standard wire gauge (S.W.G.); other columns give the diameter of the bare wires in inches and millimetres, the diameter when the wire has a single silk covering, and when it has a double cotton covering. The fifth column gives the resistance of 1,000 yards of Copper wire, Manganin wire, and Eureka wire. Manganin and Eureka wires are used when a high-resistance winding is required; for example, a potentiometer or filament resistance.

In the table particulars are given of the diameter of bare wire, and wire with single silk and double cotton covering. From the latter data, the number of turns per inch or centimetre which may be wound

TABLE GIVING PARTICULARS OF VARIOUS SIZES OF COPPER AND RESISTANCE WIRES.

S.W.G.	Diameter Bare.		Diameter S.S.C.		Diameter D.C.C.		Resistance in ohms per 1,000 yards.		
No.	Inches.	Mm.	Inches.	Mm.	Inches.	Mm.	Copper Wire.	Manganin.	Eureka.
14	·080	*2·032*	·086	*2·20*	·091	*2·30*	4·784	120	133·9
16	·064	*1·626*	·070	*1·80*	·075	*1·90*	7·478	186	209·4
18	·048	*1·219*	·053	*1·346*	·056	*1·42*	13·28	332	371·8
20	·036	*·9144*	·040	*1·017*	·044	*1·118*	23·62	591	661·3
22	·028	*·7112*	·032	*·812*	·036	*·915*	39·05	976	1,093
24	·022	*·5588*	·026	*·660*	·030	*·762*	63·24	1,581	1,770
26	·018	*·4572*	·022	*·559*	·026	*·660*	94·48	2,362	2,645
28	·0148	*·3759*	·019	*·483*	·023	*·585*	139·8	3,495	3,914
30	·0124	*·3149*	·017	*·432*	·021	*·533*	199·1	4,977	5,575
32	·0108	*·2743*	·015	*·381*	·019	*·432*	262·5	6,562	7,350
34	·0092	*·2337*	·013	*·330*	—	—	361·7	9,042	10,128
36	·0076	*·1930*	·011	*·280*	—	—	530·0	13,250	14,840
38	·006	*·1524*	·0095	*·241*	—	—	850·3	21,257	23,808
40	·0048	*·1219*	·008	*·203*	—	—	1328·0	33,200	37,184
42	·004	*·1016*	·007	*·177*	—	—	1913·0	48,825	53,564
44	·0032	*·0813*	—	—	—	—	2988·0	74,700	83,664
46	·0024	*·0610*	—	—	—	—	5313·0	132,825	—
48	·0016	*·0406*	—	—	—	—	—	303,000	—
50	·0010	*·0254*	—	—	—	—	—	—	—

is readily determined. To take an example, No. 20 D.C.C. is 0·044 inches in diameter, and it should be expected that $\frac{1}{0{\cdot}044}$ = 22 turns of this wire will be wound in 1 inch. Of course a slight reduction in the number of turns should be made in the case of those who are not expert at winding coils. If the winding is to be with No. 20 S.S.C., $\frac{1}{0{\cdot}04}$ = 25 turns should be wound in 1 inch. Wire as ordinarily purchased varies slightly in diameter measured over the insulation, but apart from this slight irregularity, with the aid of the table it is possible for those who are not familiar with wire gauges, or who have no measuring instrument such as a micrometer, to determine the gauge of wire they may have. The wire should be wound upon a small diameter rod, and the number of turns in a 1-inch length counted. The covering of the wire is easily determined by inspection. If the wire has been tightly wound, and there are, say, 45 turns, and the wire has a single silk covering, the diameter of the covered wire is $\frac{1}{45}$ = ·022 in. From the table it is evident the wire is No. 26 S.S.C.

The resistances per 1,000 yards of copper and resistance wires given in the eighth, ninth and tenth columns are useful in that one is able to closely estimate the length of wire in a coil, and hence its resistance. As an example, suppose a potentiometer is required. A potentiometer has a resistance generally of the order of 450 ohms, and No. 36 Manganin or Eureka resistance wire will be used. In the case of the Eureka wire, from the table No. 36 has a resistance of 14,840 ohms per 1,000 yards, or

14·8 ohms per yard. The length required for the potentiometer is then $\frac{450}{14{\cdot}8}$ or 30·4 yards. If the rod upon which the wire is to be wound has a diameter of 1 inch, its circumference is 3·14 inches. The total number of turns is equal to the total length of wire in inches divided by the circumference. Now 30·4 yards = 1,094 inches, and the number of turns = $\frac{1094}{3{\cdot}14}$ or 348 turns. The wire will wind 90 turns to the inch, and the length of the potentiometer will be nearly 4 inches.

E. Inductance Coils for Short Wavelengths

The aim when building an inductance coil is to procure a maximum of inductance with a minimum of self-capacity and resistance. These two latter qualities are unnecessary for the operation of the coil, and are properties of the coil by accident. Since it is desirable that the properties of a circuit (capacity, inductance and resistance) be under the control of the experimenter, that coil which possesses least self-capacity and resistance is the better coil, as the following considerations will show.

The self-capacity of the coil may be considered as in parallel with the coil. The combination, therefore, has a natural wavelength, determined by the magnitude of the *L* and *C* of the coil.

When a tuning condenser is joined across the inductance, the self-capacity is added to that of the tuning condenser. With the condenser set at its maximum value, the addition of the coil capacity is not of much account in producing a longer wavelength, since it forms but a small proportion of the

capacity in the circuit. When, however, the tuning condenser is set near its minimum value, the self-capacity of the coil forms a large percentage of the total capacity in the circuit, and it cannot be neglected. If the self-capacity and the capacity of the condenser are equal, the wavelength is 1·4 times that which it would be if no self-capacity were present. The tuning range of the coil and variable condenser has therefore suffered reduction, which is a serious matter, as more coils are required to cover the wavelength range.

Another harmful effect is manifest when the coil is in series with an E.M.F. A smaller current will flow in the coil than if the same E.M.F. were set up by induction from a neighbouring coil. The apparent resistance has increased.

The apparent inductance will also change when the frequency of the E.M.F. changes.

In practice, coils are often provided with tappings for convenience. The portion of the coil not in use, however, is still influenced by the field set up by the remainder. If the frequency of the circuit of which a section of the coil forms part, is high, a considerable amount of energy may be absorbed in the unused portion, especially so if its natural period is close to that of the energising circuit. Further, the circuit may possess several natural frequencies, which, to be sure, is quite undesirable when we are receiving signals, as it would not be possible to tune out signals with wavelengths near that of the one desired.

Self-capacity and resistance are therefore definitely harmful. They can be reduced by careful design.

The former, upon which the wire is wound, should be perfectly dry, and no more material than is

necessary for mechanical support should be used. Cardboard should be avoided.

Big claims have been made for the use of Litzendraht. It has been shown that high-frequency resistance of a well-constructed coil of Litzendraht is greater at 300 metres than for a similar coil of ordinary D.C.C. copper wire.

Litzendraht is difficult to handle and to solder. If the whole of the strands are not continuous, through damage to the wire, or poor soldering, the direct current resistance will exceed that of a similar length and area of solid wire. Furthermore, a few disconnected strands enormously increase the self-capacity and high-frequency resistance of the coil.

Coils constructed of this wire often change their characteristics for the worse after being in service for a time. The fine strands, often made brittle while being cleaned preparatory to soldering, are apt to break off at the soldered connection during the life of the coil.

Solid copper wire is cheaper to purchase than Litzendraht, but the experimenter may fear no inferior results if the following points are borne in mind.

The copper wire should have a covering of double cotton and be of heavy gauge, consistent with the dimensions of the coil. No. 20 or 22 is suitable for short-wave aerial coils. The double cotton covering ensures good spacing between turns.

The coil, when wound, must be thoroughly dried in an oven, and then impregnated with paraffin wax or shellac. The function of the wax or shellac is to prevent the absorption of moisture by the cotton, and any excess over the quantity required for this

serves no useful purpose, but increases the losses and self-capacity.

The end connections should be brought straight out from the coil, and not be brought out from the same end.

Coils should be broken up into sections to minimise dead-end losses, or better still, a number of coils should be made for use with different wave ranges.

The self-capacity of a coil is independent of its length. The inductance of a coil, containing a given length of wire, is a maximum when the diameter is 2·45 times its length, although this ratio may be considerably departed from without serious change in the ratio length of wire to inductance.

F. How to Improve the Tuning of Your Set

As previously explained, broad tuning is generally due to the effect of resistance. We may reduce resistance losses by paying attention to all those points—small in themselves—which act to increase the effective resistance.

It is of primary importance to make sure that the aerial is constructed in the best possible manner under the prevailing circumstances. Then devote attention to two things, namely, (1) the coils, and (2) the condensers.

1. The Tuning Coils

Coils which are to be used in tuned circuits should be built with the following considerations in mind.

(*a*) *The Former.*

The wire is, of course, wound on a former. It is customary to use paper or cardboard tubes, or ebonite tubes. Cardboard, preferably, should not be

used. Tubes which are constructed with layers of paper are quite hard and waterproof. If it is felt desirable to damp-proof the former, so that any moisture which it contains may be driven out, and a protection provided against the re-absorption of moisture, dry the tube thoroughly in an oven and give it a very light coating of shellac varnish and dry again. Alternatively, prepare a bath of best quality paraffin wax, immerse the tube, and allow time for all moisture to be evaporated; then remove the tube, and shake it thoroughly to remove all excess of wax. Many an otherwise good coil has been spoiled by being saturated with wax or shellac varnish.

Always bear in mind that the best former has a skeleton construction.

(*b*) *The Wire.*

Preferably, bare wire should be used in the construction of coils. This would mean that the coil would need to be wound with the turns spaced. This is highly desirable, but, unfortunately, it is rather difficult to make a satisfactory job. For this reason, double cotton covered wire is recommended, because the thickness of the cotton gives the actual wire itself spacing between turns.

Losses are, of course, caused through the covering of wires. This is especially noticeable when the covering is damp. Therefore precautions should be taken to ensure that the covering of the wire is not damp, and that it will not absorb moisture after the coil is built.

To reduce resistance losses through the wire itself, it is recommended that No. 20 or No. 22 be always used in the construction of coils for short-wave tuners.

(*c*) *The Winding.*

The turns of wire should preferably be slightly spaced apart.

Tappings always act to very much increase the effective resistance of the coil, therefore use as few tappings as consideration of convenient tuning will

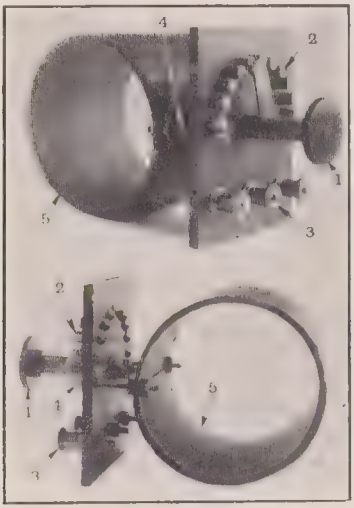

FIG. 25.—A good method of mounting a tapped coil with a stud switch. Here, 1 is the switch knob, 2 the studs, 3 the terminals for connections, 4 the coil supports, and 5 the tapped cylindrical coil. (*J. Holt, and The Wireless World.*)

allow. Ideally, use different coils for tuning over different wavelength bands.

In all cases, one should endeavour to mount the coil in the tuner so that the tappings are as short as the construction will allow. A simple method of mounting a cylindrical coil is illustrated in Fig. 25.

It is poor practice to run leads from a coil close

together, therefore do not bunch the tappings together, because it causes a loss of signal strength. It is of no use making a spaced winding if the connections are either run together or are brought to connections which are separated by a fraction of an inch through a piece of ebonite.

2. The Condenser

(*a*) Some condensers are so constructed that the shaft which carries the moving plates is insulated from the fixed plates through the use of a small ebonite or composition bush. This is not good practice. The bush should be as large as possible; that is, it should be as large as considerations of mechanical strength and durability permit.

Cheap condensers are not satisfactory for several reasons. It is found that after a while the bearings wear. Consequently the moving plates do not run true, and may foul the fixed plates, necessitating reconstruction.

In any case, when the position of the moving plates change, the capacity of the condenser for various settings changes also. If the tuner was calibrated when the condenser was new and satisfactory, the calibration is now worthless, and, in fact, a tuner cannot be calibrated for any useful purpose when the condenser is such that, after repeated movements, it does not give the same capacity all around the scale that it gave when new.

When purchasing a variable condenser, examine it critically with the idea of determining whether it is sound mechanically.

(*b*) *The Plates.*

If the metal plates and the spacing washers do

not make good electrical contact, the resistance of the circuit is much greater than it need be, signals are weaker, and tuning is not so sharp as it would be were the condenser satisfactory.

The better grade condensers have the plates connected together by a wire which is soldered to the plates ; others have the plates soldered into the supports which are milled out to receive them. Some other types have the supports cast around the plates. In all of these, resistance losses are generally quite low.

A fault with poor condensers is that the plates have the fixing holes punched too near the edge. Consequently the plates do not lie true, and the spacing washers do not bear down on the plates over their whole surface.

The connections which are made with the moving plates deserve attention. In general, the better condensers have a coiled flat spring, or its equivalent, which is soldered at one end to the spindle of the moving plates and at the other to the condenser terminal.

It is not always satisfactory to rely upon a rubbing contact, which may become dirty, or, through use, wear away, leaving an unsatisfactory connection.

3. The Tuning Range

The tuning range of a tuner with a fixed coil and a variable condenser depends mainly on the capacity of the condenser when set at its minimum and its maximum capacity. The wavelength range depends upon the square root of the difference in the maximum and minimum capacity. Thus if the condenser has a maximum capacity of 0·001 μF., and a minimum

value of 0·0001, the wavelength range with a certain coil may be 270 to 850 metres. If the condenser is so designed that the minimum capacity is 0·00001 μF. the tuning range is considerably extended, and in this case it is from 85 to 850 metres.

To increase the capacity range of a given condenser, one may use moving plates which, instead of being a full semi-circle, have a little of the edge removed, that is, instead of the plates being cut along the diameter, each side is cut back a little. The edge of the plates will then not fall along the diameter, and the angle between the two edges, instead of being 180°, will be a little less. It is convenient to remove about 5° from each side, so that now the angle between the edges is 170°.

CHAPTER IV

CRYSTAL RECEIVERS

A. Crystal Receivers

1. *What is essential in the construction of a crystal receiver?*

To build a crystal receiver one requires a tuner which will tune to the desired wavelength, a crystal detector and a pair of telephones, with, of course, the aerial and earth. A crystal receiver is satisfactory, in general, when located within about fifteen miles of a broadcast station.

The apparatus is connected up according to the tuner used. Various ways, each of which is satisfactory, are shown in Fig. 26, A, B, C and D. In each diagram C is the crystal detector, D a telephone condenser, capacity 0·002 μF., and E a pair of high-resistance telephones, that is, they are marked 2,000 or 4,000 ohms.

2. When a coil with two sets of tappings is used as the tuner, the connections are made as in Fig. 26A. B is the coil which is provided with tappings from groups of turns and single turns. It is made as described in section B2, p. 21. The fixed condenser A in the aerial circuit may have a value of 0·0003 μF.

3. In Fig. 26B a variometer B is used in conjunction with a fixed condenser A. A loading coil may be connected at F when one desires to receive longer wavelength signals. Normally the terminals F

should be short-circuited with a piece of wire. The dimensions of the variometer and condenser have been given in a previous section.

4. In Fig. 26C are the connections of a receiver using as the tuner a tapped coil B and variable condenser A. The switch is provided to join them in series or parallel, whichever gives best results.

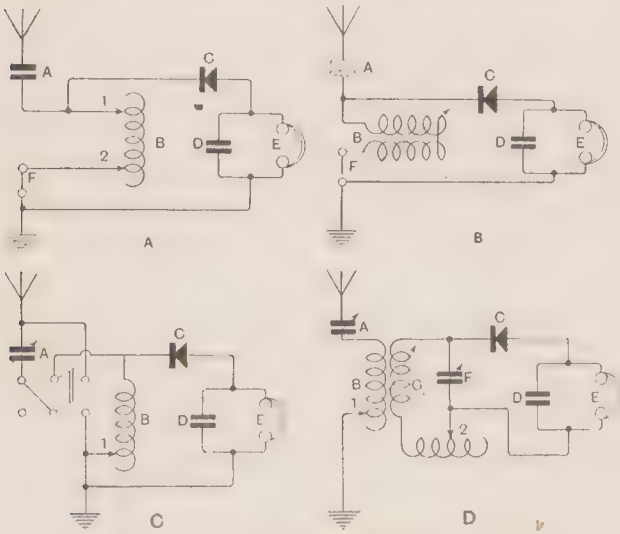

FIG. 26.—Four good types of crystal receivers.

5. A loosely-coupled tuner is connected with the crystal and telephones, as shown in Fig. 26D. The tuner is that described in section F3, p. 34.

6. In each case notice that one side of the crystal is connected with the aerial end of the coil, and one side of the telephones with earth. The remaining connections from the crystal and telephones are joined together.

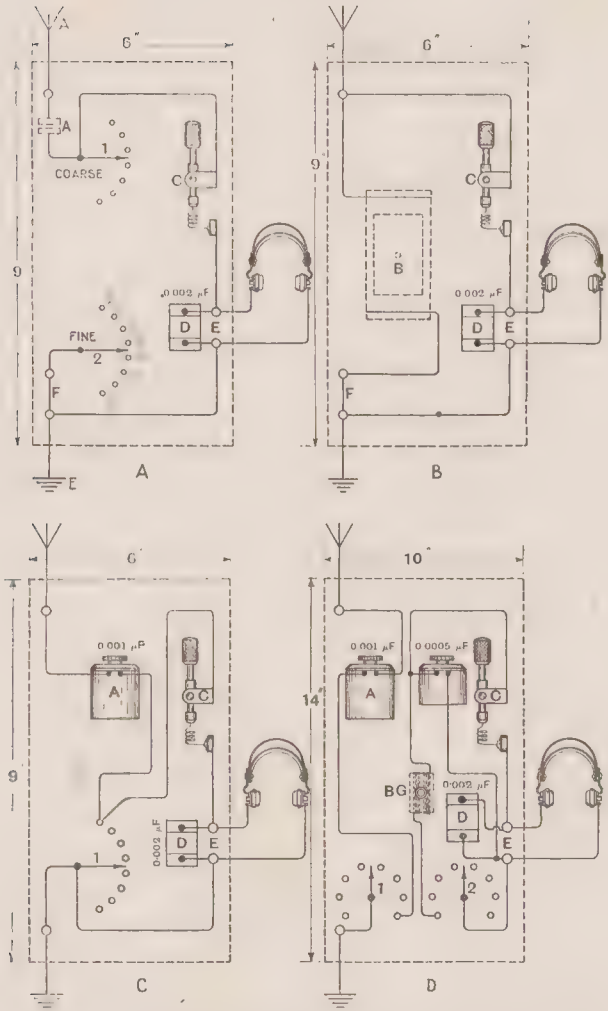

FIG. 27.—The four receivers of Fig. 26 are here shown as they appear in actual instruments. The switch of Fig. 26c is not shown in the receiver of Fig. 27c.

In some cases best results are obtained without the telephone condenser marked C in each figure. This depends upon the type of telephone employed.

B. How is a Crystal Receiver Assembled?

The arrangement of the components of the crystal receivers, the diagrams of which were given in Fig. 26, A, B, C and D, is given in Fig. 27, A, B, C and D respectively.

The parts may be easily identified, and the size

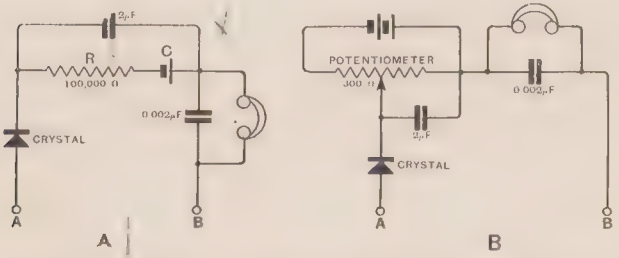

FIG. 28.—Methods of applying a potential to crystal detectors to increase their sensitivity.

of suitable panels is given. The boxes may be 5 or 6 inches deep as desired.

C. What Crystal Detectors are Generally Used?

1. A carborundum crystal, used in conjunction with a steel point or spring, is very stable and fairly sensitive, but to obtain best results a battery and resistance are used. The resistance may be variable, when it is termed a potentiometer; one having a total resistance of the order of 300 ohms is satisfactory. The connections are given in Fig. 28B. The battery may be two or three dry cells.

A much better arrangement is to use a fixed

resistance R and a dry cell C, as shown in Fig. 28A. The resistance is of the order of 100,000 ohms. The resistance and cell are shunted with a 2-microfarad condenser to carry the signal currents. A carborundum-steel detector is illustrated in Fig. 29.

2. Another good stable detector is called the Perikon detector, and makes use of two different crystals, which are mounted so that their surfaces are in contact. One is zincite, which is a natural red oxide of zinc, and the other is a combination of the sulphides of copper and iron, and may be bornite or chalcopyrite.

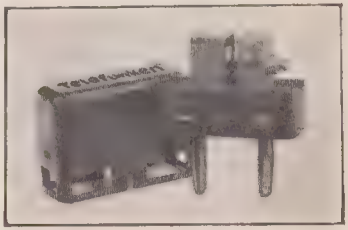

FIG. 29.—A plug-in type carborundum-steel crystal detector and case.

3. Very good results are obtainable with a detector which consists of a light wire point called a cat-whisker, resting on the surface of a piece of galena or silicon. Usually a fine wire, No. 30 copper or smaller, gives best results, although some prefer to use a "cat-whisker" consisting of three or four strands of No. 40 copper wire twisted up together. The advantage of this sort of detector lies in the large number of sensitive spots which may be found by placing the cat-whisker in contact with different parts of the crystal. The disadvantage lies in the ease with which the sensitive spot is made not sensitive, and sometimes care and delicate adjustment are necessary before a really sensitive spot is found. A detector of this sort is illustrated in Fig. 30.

D. Mounting Crystals

Most crystals lose their sensitivity when heated, and for this reason they are fixed in a cup with a low temperature melting solder, such as Wood's

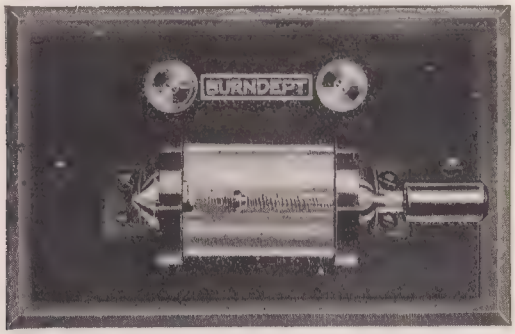

FIG. 30.—A crystal detector of the " cat-whisker " type. (*Burndept, Ltd.*)

metal. The Wood's metal should be heated with a flame and the cup filled. Just before it becomes solid drop in the crystal.

E. Adjusting a Crystal Receiver

Assuming there is a transmission to listen to, and the receiver is within range, connect up the aerial and earth to the instrument terminals, and see that the detector crystals or crystal and cat-whisker are in contact.

To find the sensitive spot it is almost essential to use a test buzzer. A test buzzer consists of a buzzer, which may be purchased for a shilling or two, a few dry cells, and a coil of wire. Connect them as shown in Fig. 31.

When the buzzer is set going, and the test coil is

held near the receiver, adjust the detector until the buzzer note is heard most strongly in the telephones. Move the test coil further away from the receiver, and make further adjustments to the detector until it is certain the most sensitive adjustment is found.

Now remove the buzzer and tune in the signal as follows. When the tuner consists of a variometer, as in Fig. 27B, it is only necessary to turn the knob attached to the moving coil.

When a tuner like Fig. 27A is used, make adjustments with the groups of tappings first, and when the signal is heard, adjust with the fine-tuning switch.

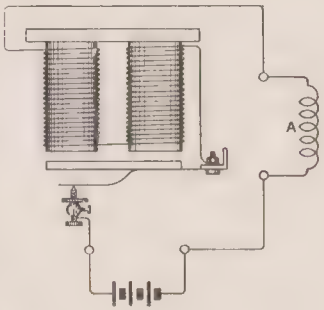

FIG. 31.—A test buzzer, for use when adjusting a crystal detector.

With tuners which have a variable condenser and a variable inductance, as in Fig. 27C, set the inductance switch at a given contact, and slowly rotate the condenser knob. If nothing is heard, repeat the operation with the coil switch in a different position.

When a two-circuit tuner like Fig. 27D is used, place the coils close together, take a condenser knob in each hand, and move them together. When the signal is heard make the coupling weaker, and retune with the condensers until best strength is obtained.

Finally, make sure the crystal is in its most sensitive condition.

F. What is the Function of a Crystal Detector?

The wireless energy is collected by the aerial, and the aerial circuit which contains the tuner is adjusted so that the signal which we wish to receive is as strong as possible.

The tiny currents set up in the aerial circuit are varying with enormous frequency. If it is remembered that the average frequency of the voice is six or seven hundred cycles per second, and that the frequency of the wireless waves used for broadcast transmissions is in the neighbourhood of one million, it will be realised that wireless currents vibrate to and fro with enormous frequency.

The ordinary telephone receiver consists of a magnet around which is a winding, and a diaphragm. When a varying current flows through the winding, the magnetic pull on the diaphragm is varied, which vibrates, and sound waves are set up. A diaphragm will vibrate very well up to frequencies of about four or five thousand cycles per second, but it will not, of course, respond to the enormous frequency of one million. It would not respond at all, because a current in one direction is followed so quickly by a current in the other direction that the diaphragm has no time whatever to move.

In order that the very high-frequency wireless currents may be converted into sound waves it is therefore necessary to use something besides the telephone receiver, and it must be obvious that this extra apparatus must be a device that will only permit current to flow through the receiver in one direction. Then, of course, the diaphragm will be easily moved.

It is found that certain crystals when in contact

with each other or with a steel or copper point act as rectifiers, and only allow current to flow through them in one direction. When the detector, then, is connected in circuit, it will only allow the electric current to pass through the circuit in one direction. The detector should obviously be connected in series with the telephones.

It has been found that the response from the telephone receiver is proportional to the voltage applied to the detector, so that it is said that the detector is a voltage-operated device. This is true of many of the common detectors used nowadays, and means that the detector and telephones must be joined across that portion of the tuner which will produce the highest voltage. It is therefore joined across the whole of the inductance in the tuner. Further, in order that this voltage may be as high as possible, when tuning in one generally uses the smallest value of capacity and the highest value of inductance. Thus, one would expect to receive stronger signals if a variometer were used in the aerial circuit than if a small coil shunted by a large condenser were connected in the aerial circuit.

G. Faults

2. *What faults are usually met with in crystal receivers?*

Generally the fault lies with the detector, and this is easily found when a test buzzer is used. It is often necessary to try several specimens before satisfactory results are obtained. The crystal should not be handled, nor allowed to get dirty and dusty. It may be cleaned with a brush and soapy water.

Faults in tuners have been dealt with in a previous section.

Sometimes the telephones or telephone cords become disconnected. Whether this is so may be found by listening to them when the ends of the cords are connected with a single dry cell. A loud click should be heard when the connection is made.

If noises are heard when receiving, make sure the telephone cords are not intermittent. If noises are heard when the cord is shaken, the cord is probably faulty, and should be repaired. Noises may, of course, be due to other causes, such as nearby power or telegraph lines; or due to the proximity of electric trams or trains. With a crystal receiver it is difficult to get rid of them, although attention to the earth connection will often be beneficial.

CHAPTER V

THE VALVE

A. How a Valve Works

1. It was found by experiment that when the filament of an electric lamp is heated, small particles of electricity leave the surface of the filament. The particles of electricity are called

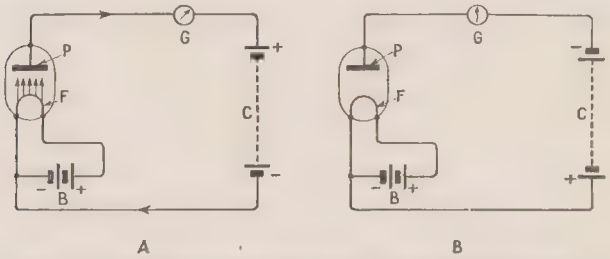

FIG. 32.— Explaining the action of a two-electrode valve.

electrons. The *rate* at which the electrons are evaporated from the filament depends upon the filament temperature, an increase in the temperature causing an increase in the number of electrons leaving the filament.

If a metal plate is sealed inside the glass bulb along with the filament, and a battery, together with an instrument which indicates the presence of electric currents, is connected between the plate and the filament, two interesting things may be observed.

2. Firstly, with the metal plate P, Fig. 32A, con-

nected through the indicating instrument (galvanometer) G to the positive terminal of the battery C, and the negative terminal joined to the filament F, when the filament is heated to incandescence by the battery B, a current flows between the filament and plate. The flow of current is indicated by the galvanometer G.

3. Secondly, when the battery C is reversed, so that the positive terminal is joined with the filament

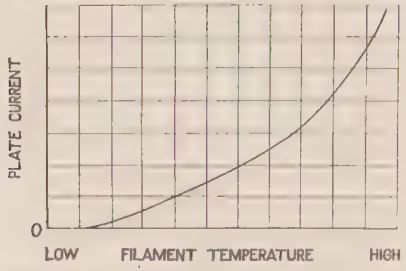

FIG. 33.—The curve shows how the plate current increases with the filament temperature.

and the negative terminal joined through the galvanometer to the plate P, no current flows. See Fig. 32B.

B. The Effect of Varying the Temperature of the Filament

If the filament is dull, only a few electrons will be thrown off and travel to the plate, irrespective of the magnitude of the positive plate voltage, so that with the valve connected as in Fig. 32A, the galvanometer reading will be very small.

As the filament heating current is increased the temperature increases, and so does the number of electrons which are evaporated from the filament

and travel to the plate. The galvanometer now indicates a larger current.

A curve may be drawn showing the plate current, as it is called, for various degrees of filament brightness. Such a curve is given in Fig. 33. It should be noticed that the plate current does not increase uniformly with the filament temperature. Thus, if the temperature is low, an increase of, say, 100 degrees, causes only a small increase in the plate current ; while if the temperature is high, an increase

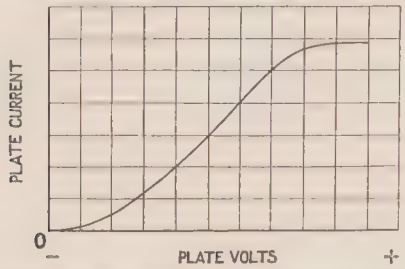

FIG. 34.—When the filament temperature is fixed, and the plate voltage is varied, the plate current increases as shown by the curve.

of 100 degrees causes a much larger corresponding increase in plate current.

C. The Effect of Varying the Plate Voltage

Suppose the filament temperature is fixed, and we vary the plate voltage. Starting with zero volts, as the plate is made more positive by increasing the voltage of the battery the current increases. We may therefore draw a curve showing the anode current, as given by the galvanometer G of Fig. 32A, for various plate voltages. The sort of curve obtained is given in Fig. 34.

D. Does this Type of Valve Rectify?

Referring to Figs. 32A and B, we explained that when the positive terminal of the battery is connected to the plate, a current flows ; but when the negative terminal is joined to the plate, no current flows.

Therefore this sort of valve may be used as a rectifier, because it allows current to flow in one direction but not in the other.

Valves of this type are called rectifying valves, and may be used (*a*) as a rectifier in place of the crystal

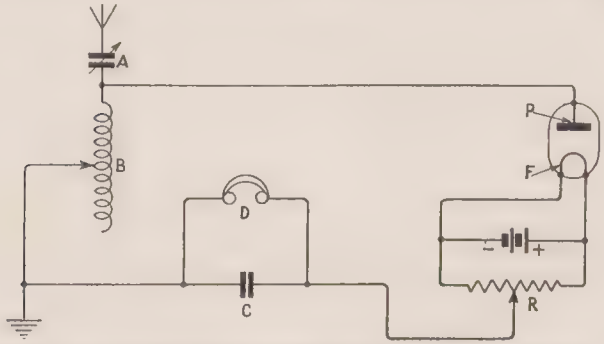

FIG. 35.—The method of connecting a two-electrode valve in a receiver to operate as a rectifier.

in a crystal receiver, or (*b*) to rectify alternating or varying currents for various purposes, where a supply of direct current is required, although alternating current only is available.

E. The Two-Electrode Valve as a Rectifier

1. *How is a two-electrode valve used to rectify wireless signals?*

The valve is placed in circuit instead of the crystal rectifier, as shown in Fig. 35. Here A is the aerial tuning condenser, B the aerial tuning coil, C the

telephone condenser, and D the high-resistance telephones. The plate of the valve P is connected to the aerial side of the coil, and the filament F is joined to the telephones through the potentiometer R. The purpose of the potentiometer is to enable one to give the plate a small normal potential with respect to the negative terminal of the filament battery. By changing the position of the contact along the potentiometer, the potential may be varied by a voltage equal to that of the heating battery.

When the plate is made positive by the wireless signal, a small current will flow through the telephones, but when the plate is made negative by the signal, no current will flow. The operation is therefore similar to that of the crystal rectifier. The signal strength obtained with this arrangement, however, is probably not so great as when a crystal detector combination is used, and it was, therefore, only used in wireless receivers for a very short time.

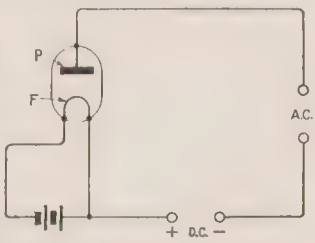

FIG. 36.—When a supply of direct current is required and only an alternating current is available, the valve is connected in this manner.

2. *The two-electrode valve as a power rectifier.*

If we wish to obtain a supply of direct current from an alternating current source, the two-electrode valve is connected as shown in Fig. 36.

One terminal of the alternating current source is joined to the plate, and the other is connected with the negative terminal of the direct current supply. The load, of any sort, is connected across the terminals marked direct current (D.C.). Every time

a positive potential is applied to the plate, current flows through the valve. When a negative potential is applied to the plate, no current flows. Consequently, the current which flows in the load attached

FIG. 37A.—Showing the construction of a three-electrode valve (V24 type). (*The M.O.V. Co.*)

FIG. 37B.—An American valve. Notice the plate and grid are flat.

to the terminals D.C. always flows in the same direction. This follows from the explanation given in section A above.

Rectifiers are connected up in this way when, for example, direct current is required to charge accumulators from alternating current mains.

Frequently the high voltage direct current necessary

for wireless transmitters is obtained from a power unit consisting of a supply of high voltage alternating current and rectifiers of this type.

F. The Three-Electrode Valve

If we place between the plate and filament a third electrode, we have a device which is capable

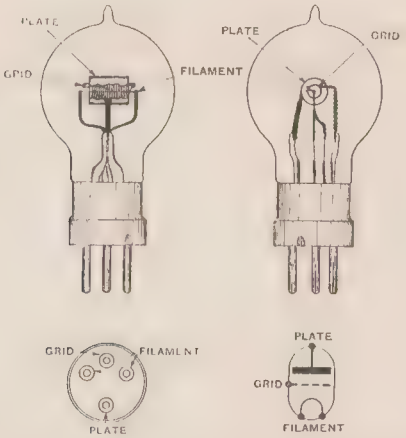

FIG. 37C.—Showing the construction and symbols of an R type valve.

of many more uses than the simple two-electrode valve.

The three elements of the valve are called (1) the filament, (2) the grid, and (3) the plate or anode.

The construction of typical three-electrode valves (generally simply called valves) is shown in Figs. 37A, B and C.

1. The filament generally consists of a straight wire of tungsten, thoriated tungsten, tantalum, or platinum coated with lime. The filaments of

power valves are often V-shaped. Tungsten is the material generally used in ordinary receiving valves.

The thoriated tungsten filament is a tungsten filament containing a small percentage of thorium. Valves known as dull emitters have a filament of this sort. It is found that for a given power, a thoriated filament will evaporate a much greater number of electrons than an ordinary tungsten filament under the same conditions, so that a receiving valve, which only requires to have a limited electron emission, may be designed with a filament which consumes much less power than the equivalent valve having a pure tungsten filament.

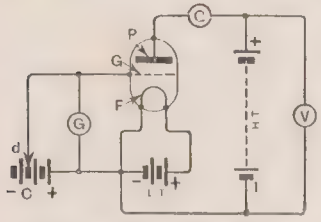

FIG. 38. Explaining the action of a three-electrode valve. The instruments, V in the plate circuit and G in the grid circuit, indicate the voltage of the batteries.

The two ends of the filament are led through the valve pinch to valve legs.

2. The grid consists of a spiral coil of wire or a wire mesh surrounding the filament, but not touching it. In some other types of valve the grid mesh may have an oval cross section, or it may consist of two flat portions, one of which is mounted on each side of the filament. One wire is taken from the grid through the glass pinch to a valve leg.

3. The plate consists of a cylinder of nickel, mounted so that it surrounds but does not touch the grid. In some valves the plate has an oval cross section, and in others it consists of two flat plates

which are connected together, and mounted one on each side of the flat grids. One wire is taken through the glass pinch to a valve leg.

The valve is carefully exhausted of air.

G. The Action of the Grid

1. Let us connect up the valve according to Fig. 38. In the plate circuit join a galvanometer G, and a battery, called the high-tension battery, with its positive terminal to the galvanometer and its negative terminal to the filament. In the grid circuit connect cells as at C, so that the number in circuit may be varied by changing the position of the clip D.

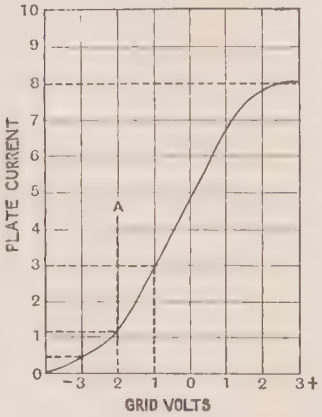

FIG. 39.—The sort of curve obtained when, with the plate voltage and filament temperature fixed, the grid voltage is varied. Notice how it bends at the ends.

Let us join D to the positive end of the grid battery. A current will flow in the plate circuit, indicated by the galvanometer G.

Now connect one cell in the grid circuit, so that the grid has got a small negative voltage with respect to the filament. The effect is to reduce the anode current. As more and more negative voltage is given to the grid, by increasing the number of cells in circuit, so the plate current falls off.

When the plate voltage is fixed, and the grid voltage is varied, a curve showing the plate current

for the different grid voltages may be drawn as shown in Fig. 39.

2. *The effect of the grid.*

Let us now fix the plate voltage at, say 50 volts, and connect the grid with the negative terminal of the filament battery. The galvanometer will have a certain reading, and we will suppose it reads 2 milliamperes. Now make the grid negative with respect to the filament, let us say by 0·2 volt. This reduces the plate current. Leaving the grid circuit unchanged alter the plate voltage so that the current is the same as before, namely, 2 milliamperes. Let us suppose the plate voltage is now 51 volts.

It will be observed that a change in the grid voltage of 0·2 volt is equivalent to changing the plate voltage by 1·0 volt, so far as the plate current is concerned; that is, a small voltage in the grid circuit is much more effective in changing the plate current than a small voltage in the plate current. In the case considered, the grid is five times more effective. *In other words, the amplification factor of this particular valve is* 5 under the conditions of the test.

This property of a three-electrode valve is very important. It means that if we apply a small voltage between the grid and filament the change produced in the plate current is much greater than if the same voltage were applied in the plate circuit.

3. *Why has the grid such a large controlling influence over the plate current?*

The grid is effective in producing changes in the plate current because of its proximity with the filament. The effectiveness may be increased (*a*) by

reducing the diameter of the grid ; (*b*) by reducing the grid mesh, that is, using more turns of wire in the grid ; (*c*) by increasing the size of the grid wire ; and (*d*) by increasing the distance between the plate and the grid.

The amplification factor (or "effectiveness" of the grid) depends only upon the construction or geometry of the valve.

4. *What is meant by the internal resistance of the valve ?*

Referring to the connections of Fig. 38 again, let us fix the grid voltage at, say, zero volts by connecting it directly to the filament battery. As before, let the plate voltage be 50 volts when the plate current is 2 milliamperes. Now increase the plate voltage by, say, 5 volts. If the plate current has increased to 2·5 milliamperes, we know that 5 volts extra on the plate has resulted in an increased current of 0·5 milliampere. The internal resistance of the valve under these conditions is then from Ohm's law

$\frac{5}{0{\cdot}0005}$, or 10,000 ohms.

It is not correct to speak of internal resistance when the valve is connected in a high-frequency circuit, because of the capacity between the valve electrodes. The grid-filament capacity may be, for example, 10 or 15 micro-microfarads. To be correct, one should speak of internal impedance, because the valve capacity, although very small, will carry current when high-frequency voltages are applied.

The best valve for general purposes is that which has the highest amplification factor for a given internal impedance.

Particulars of Valves commonly used in Wireless Receivers

(A) *Marconi-Osram Receiving Valves.*

1. *Type R.*—This type is extensively employed as a general purposes valve. Gives good results as a detector, L.F. amplifier, or oscillator, and is one of the best all-round valves for use where it is not desired to employ special types for one specific purpose.

Type.	Filament Volts.	Filament Amps.	Anode Volts.	Approx. Overall Length, including Cap.	Approx. Diameter of Bulb.
				m/m.	m/m.
R	4·0	0·67	70	110	54

2. *Type R. 4.B.*—This valve is used either as a detector or for low-frequency amplification. It has a long life and its filament voltage is well within the capacity of a 4-volt accumulator.

3. *Type R. 4.C.*—Similar valve to R. 4.B. and operates on the same filament and anode voltages, but has a slightly more open grid and lower impedance. Gives silent amplification and has a ong life.

Type.	Filament Volts.	Filament Amps.	Anode Volts.	Approx. Overall Length, including Cap.	Approx. Diameter of Bulb.
				m/m.	m/m.
R.4.B.	3·8	0·65	50–70	105	50
R.4.C.	3·8	0·65	50–70	105	50

4. *Low Temperature Emitter Type.*—The special feature of these valves is that the filament current and voltage, *i.e.*, the working filament wattage, is very small, being in some cases less than *one quarter*

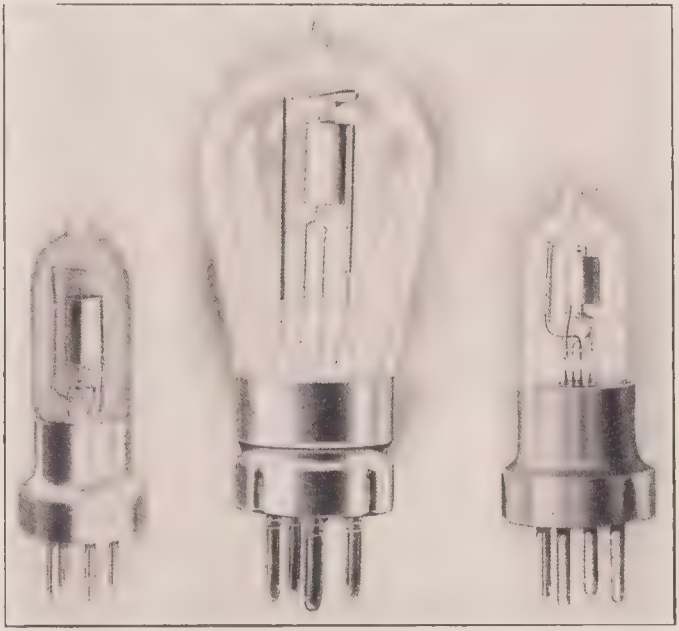

FIG. 40.—Illustrating the following valves: L.T.2, D.E.R., and L.T.3. (*M.O. Valve Co.*)

of that required by ordinary valves having similar operating characteristics. The filament runs at a dull red temperature, thus ensuring a very long life, as well as freedom from crackling, etc. The filament voltage and current are so low that primary batteries may be used for filament heating in the case of the smallest types. See Fig. 40.

Type.	Filament Volts.	Filament Amps.	Anode Volts.	Approx. Length, including Cap.	Approx. Dia. of Bulb.	Description.
				m/m	m/m	
L.T.2	3·5	0·11	30–50	105	25·5	Fitted with standard 4-pin cap. A high-frequency amplifying valve.
D.E.R.	1·8	0·4	30–50	115	45·0	Fitted with standard 4-pin cap. An oscillating, rectifying and amplifying valve, suitable for replacing existing R type.
L.T.3	1·8	0·11	30–50	90	20·0	Fitted with standard 4-pin cap. An oscillating, rectifying and amplifying valve, suitable for high or low frequency.

5. *Type L.S.1.*—A low-frequency amplifying valve for use where considerable power is required (*i.e.*, for loud speakers). Voltage magnification 11.

6. *Type L.S.2.*—Similar to the L.S.1 but with lower impedance, for use as last stage of multi-valve low-

Type.	Filament Volts.	Filament Amps.	Anode Volts.	Approx. Overall Length, including Cap.	Approx. Diameter of Bulb.
				m/m	m/m
L.S.1.	6·0	1·5	300–600	125	67
L.S.2.	6·0	1·5	300–600	125	67

frequency amplifier. It has a voltage magnification of 5, but will deliver more power than the L.S.1.

7. *Type L.S.3.*—A low-frequency amplifying valve (designed for loud speakers) for use as the final stage of a low-frequency amplifier using R type valves in the initial stages.

This valve is intermediate between the R and the L.S.2, and, while serving the same purpose as the latter, works with a plate voltage of the same order as that of the ordinary R type, thus making a separate high-tension battery unnecessary.

Type.	Filament Volts.	Filament Amps.	Anode Volts.	Approx. Overall Length, including Cap.	Approx. Diameter of Bulb.
				m/m	m/m
L.S.3	4·0	0·65	70–100	100	54

8. *Type Q.*—Three-electrode receiving valve used chiefly as the rectifying valve in amplifiers employing V.24 type valves in cascade. Can also be used as an amplifying valve for general receiving work.

9. *Type Q.X.*—Three-electrode receiving valve. Used chiefly as a rectifying valve in amplifiers employing several V.24 type valves in cascade. Can also be used for general receiving purposes.

10. *Type V.24.*—Three-electrode receiving valve. Used chiefly as an amplifying valve in amplifiers consisting of several valves in cascade, both for high and low frequency, also as low power high-frequency generators in local oscillators.

Type.	Filament Amps.	Filament Volts.	Normal Anode Volts.	Approx. Voltage Magnification.	Approx. Overall Length including Caps.	Approx. Diameter of Bulb.
					m/m	m/m
Q.	0·45	5·0	Rectifying 25 Amplifying 150–200	50	73	18
Q.X.	0·75	5·0	Rectifying 25 Amplifying 100	20	73	18
V.24	0·75	5·0	24–30	6	73	18

11. *Type D.E.V.*—Dull emitter receiving valve. A substitute for the V.24 type with special "dull emitting" filament.

Type.	Filament Amps.	Filament Volts.	Anode Volts.	Approx. Voltage Magnification.	Approx. Overall Length, including Cap.	Approx. Dia. of Bulb.
					m/m.	m/m.
D.E.V.	0·2	3·0	24	6	73	18

Type.	Filament Amps.	Filament Volts.	Rectifying Anode Volts.	Approx. Overall Length, including Cap.	Approx. Dia. of Bulb.
				m/m.	m/m.
D.E.Q.	0·2	3·0	24	73	18

12. *Type D.E.Q.*—Dull emitter receiving valve. A substitute for the Q and QX types with special "dull emitting" filament.

(B) *Two-electrode Valves (Power Rectifiers for Small Transmitters).*

Type U.3.—A small power, two-electrode rectifying valve, dissipating 15 watts at the anode, suitable for voltages up to 1,500. See Fig. 41.

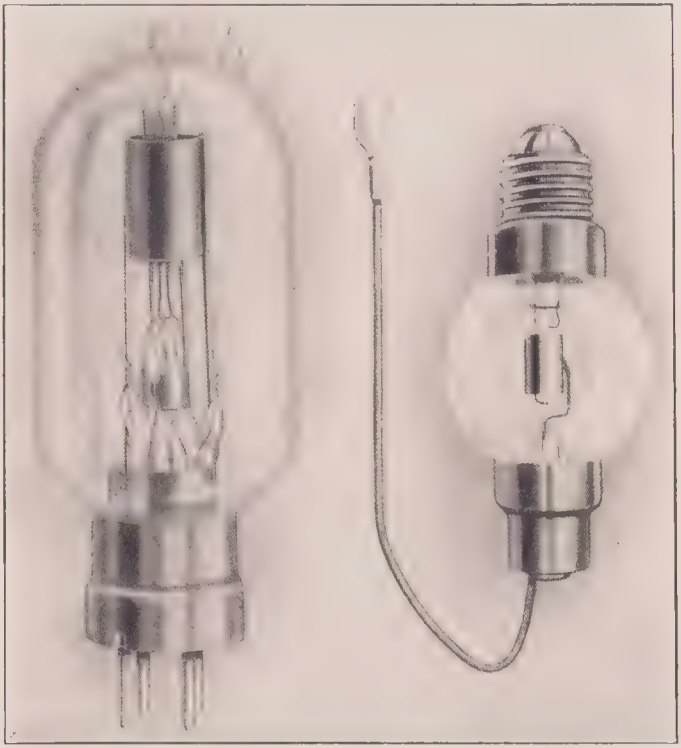

FIG. 41.—Illustrating the type T30 power valve, and the type U3 rectifying valve. (*M.O. Valve Co.*)

Type.	Fila-ment Volts.	Fila-ment Amps.	Dissi-pation Watts.	Total Emis-sion Milli-amps.	Average Imped-ance ohms.	Approx. Overall Length, includ-ing Cap.	Ap-prox. Dia. of Bulb.
						m/m.	m/m.
U.3	5·5	1·5	15	80	4500	125	56

(C) *Transmitting Valves.*

*Type T.*30.—A small power-transmitting valve, dissipating 30 watts at the anode, suitable for voltages up to 1,000. See Fig. 41.

Type.	Filament Volts.	Filament Amps.	Anode Volts.	Approx. Overall Length, including Cap.	Approx. Dia. of Bulb.
				m/m.	m/m.
T.30	7·0	1·8	1000	135	60

(D) *Mullard Receiving Valves.*

1. *Type O.R.A., A and B.*—The O.R.A. valve is recommended when especially good amplification per valve is required, the "B" pattern being particularly suitable for use in the reception of very short waves. The extremely low capacity of the "B" type valves, due to the absence of long leads and pins, is of advantage when used in high-frequency amplifiers for reception below 300 metres.

Type.	Filament Volts.	Filament Amps.	Anode Volts.	Approx. Overall Length, including Cap.	Approx. Dia. of Bulb.
				in.	in.
O.R.A.	3·6–4·0	0·62	20–50	$3\frac{3}{4}$	8

2. *Type R.A.* –This valve is designed to give robust service with good amplification. It can also be used for detection.

Type.	Filament Volts.	Filament Amps.	Anode Volts.	Approx. Overall Length, including Cap.	Approx. Dia. of Bulb.
				in.	in.
R.A.	4·0	0·67	50–75	$4\frac{1}{4}$	$2\frac{1}{4}$

(E) *Transmitting Valves.*

Type.	Filament Volts.	Filament Amps.	Anode Volts.	Dissipation.	Length.	Diameter.
					in.	in.
O/5	4·8	0·75	200 to 400	5 watts	$4\frac{1}{4}$	$2\frac{1}{4}$
O/10A	4·5	0·95	500 ,, 700	10 ,,	$4\frac{1}{4}$	$2\frac{1}{4}$
O/10B	5·2	1·2	200 ,, 300	10 ,,	$4\frac{1}{4}$	$2\frac{1}{4}$
O/20	5·7	1·9	200 ,, 400	20 ,,	5	$2\frac{3}{8}$
O/30A	5·7	1·9	1000 ,, 1200	30 ,,	5	$2\frac{3}{8}$
O/30B	7·0	2·4	400 ,, 600	30 ,,	$5\frac{1}{4}$	3
O/40	7·0	2·4	600 ,, 800	40 ,,	$4\frac{1}{4}$	3
O/50	7·0	2·4	800 ,, 1000	50 ,,	$5\frac{1}{4}$	3

Dull Emitters*

It is thought that the following notes on those valves which work with the filament at a dull red heat will be interesting in view of the fact that they are coming more and more into general use.

A. The important desirable features which the ideal receiving valve should possess are (1) long life ; (2) low filament energy to supply the necessary electron emission ; (3) uniformity of electron emission during life ; (4) quietness of operation ; (5) electrical robustness of the filament.

The new filament which is employed in the so-called dull emitter or low temperature valves meets more of these requirements than does the tungsten filament which is used in the ordinary type of receiving valves.

B. The outstanding features of the new type of filament are : (1) For the same life, the new filament gives the same electron emission for a much smaller expenditure of power than does the pure tungsten filament. (2) The new filament gives a uniform electron emission during life. (3) Valve noises are reduced. (4) It is possible to make valves with a much lower internal (filament to plate) resistance. (5) The new filament has a long life. Life is not terminated by a " burn out," but by loss of electron emission. The loss in emission occurs suddenly.

C. The electron emission from a given material (such as tungsten) depends upon two things, one of which is a constant for that particular material, and the second is a function of the temperature. The electron emission increases very rapidly with

* Compiled from information supplied by the Radio Corporation of America.

temperature (see Fig. 33, p. 74). To give one control of the electron emission, therefore, a filament resistance is connected between the filament heating accumulator and the filament. Altering the resistance changes the current which is flowing through the filament, and therefore its temperature and electron emission.

In the case of the ordinary tungsten filament, to obtain the desired emission it is necessary to heat the filament to incandescence.

In the case of the filament used in dull emitters, the required emission is obtained with the filament burning at a low temperature, and in fact, if the temperature is increased beyond a certain point, the emission falls off and may cease altogether.

D. The filament used in the dull emitter type valves consists of tungsten in which there is a small percentage (considerably under 5 per cent.) of a material that has a very high electron activity. This active material as at present used is thorium, and a chemical composed of this thorium is mixed with the tungsten early in the stage of manufacture of the material from which the filament is made.

When the completed filament containing the active material is operated in a vacuum at a certain high temperature there is a change from the chemical compound to pure thorium. At another certain lower temperature there is a constant diffusion of this thorium towards the surface of the filament. By this process a layer of these thorium atoms one atom deep (and only one deep) is found on the surface of the filament. This layer of atoms of pure thorium is of high electron emissivity, so that ample emission is obtained from it at a temperature

that would give practically no useful emission from a pure tungsten filament as used in ordinary valves.

Thorium cannot, however, remain indefinitely on the surface of the hot filament, because in comparison with tungsten it has a high rate of evaporation, this rate, of course, increasing with the temperature. The instant that an atom of thorium evaporates from the surface there is a movement of atoms inside the body of the material which places another atom on the surface layer in the position occupied by the former atom.

The reaction inside of the thoriated filament when operating at its normal temperature is such that the production of thorium in the interior and the rate of its diffusion to the surface are proportional, so that at normal rated temperature they compensate for the loss of thorium atoms by evaporation.

E. If the filament is operated at an abnormally high temperature, the electron emission will at first be very large, but the higher this abnormal temperature the quicker will this high emission fall off. If afterwards the filament is operated at normal temperature for a time, the evaporation of thorium is reduced to normal, and the diffusion from the interior rebuilds the electron emitting layer at the surface. The filament thus gradually becomes normal again.

F. Dull emitters, therefore, are supplied with much smaller filament power than those of other types. If the dull emitter is designed to work from 4 to 6 volts, the current is generally about one quarter that required for the equivalent ordinary receiving valve. When the filaments are designed for lower voltages, the power required is still very much less than that required for ordinary valves.

G. On account of the smaller filament currents required, the filament resistances which are used with ordinary valves, and have a resistance of 4 or 5 ohms, are of not much use with dull emitters. The filament resistance should be of fine wire and have a value in the neighbourhood of 30 ohms, depending, of course, entirely upon the current and voltage for which the valve is designed.

H. The life of dull emitter valves is usually ended by a decrease in the electron emission. This is indicated by the necessity for increased filament voltage. This decrease is not gradual during life, but occurs over a period of a few hours at the end of the life of the filament.

If, by accident, excessive filament or plate voltage is applied to the valve, the filament may lose its activity. Ordinarily, the activity may be restored by lighting the filament at normal voltage for twenty minutes or longer with the plate voltage off.

I. Dull emitters are connected in the circuit in the same way as ordinary receiving valves. The filament resistance should be joined between the negative terminal of the battery and one side of the filament. When a grid condenser and leak is to be used for rectification, the grid leak *must* be joined to the positive terminal of the filament heating battery.

As usual, it is necessary to give the grid circuit the proper negative bias, which depends upon the plate voltage used.

The Best Valve

There is often a little confusion in the minds of those who build their own sets, and, consequently, choose the valves to use with them, as to the relative

importance of such things as amplification factor, internal resistance, etc. ; the difference between an ordinary valve and a power valve, which we so often use when it is desired to operate a large loud speaker, and so on. These points are dealt with below.

A. *The amplification factor* of a valve is the ratio of the plate voltage to the grid voltage required to produce a given change in plate current. For most ordinary receiving valves the amplification constant lies between 6 and 10. That is to say, if 1 volt applied to the grid produces a change in plate current of, say, 0·5 milliampere, it would be necessary to apply between 6 and 10 volts to the plate circuit if we required the same current change by applying voltages to the plate circuit instead of the grid. (See p. 82.)

B. *The internal resistance* (or impedance) is the rate at which the plate voltage changes with respect to the plate current. (See p. 83.) The output resistance of most ordinary receiving valves lies in the neighbourhood of 40,000 ohms, and is very often much greater.

C. Referring to the list of valve constants, it will be noticed the L.S. 2 valve gives more power output than the L.S. 1, although its amplification constant is only half. It is often thought, since we require the valve to amplify as much as possible, why not build it with a high amplification factor? Of course, it is a simple matter to build a valve with a high amplification factor. It is only necessary to change the spacing of the valve elements. For example, the Q type valve has an amplification factor of about 25.

Unfortunately, when the amplification factor is

made high, the internal resistance is higher accordingly. Thus, in the case of the Q valve above, the internal resistance is of the order of 250,000 ohms. This suggests the use of another term to indicate the effectiveness of the valve; the term used is *mutual-conductance*. This quantity is a measure of the effectiveness of the grid in producing or changing the current in the plate circuit. For example, if 1 volt change in grid potential causes a change in the plate current of 0·5 milliampere, the valve is said to have a mutual-conductance of 0·5 milliampere per volt, or 500 microhms.

The mutual-conductance is equal to the amplification constant divided by the output resistance.

The internal impedance of a valve is inversely proportional to the effective area of the plate; consequently, if this area can be increased, the impedance of the valve may be lowered without changing the amplification constant, or, if it is desired to keep the output impedance the same, a slight change in the construction of the grid will raise the amplification factor, but leave the impedance unchanged. To make these alterations with valves having a cylindrical plate, this calls for a longer filament, with a correspondingly larger grid and plate.

A valve with a lower mutual conductance, that is, for example, with the same amplification factor as ordinarily used, but with a lower plate resistance, gives improved amplification for two reasons.

First, for the same input, the actual current output in a given circuit is increased, simply because the total impedance of the circuit, consisting of the valve and the connected apparatus, is lowered.

Secondly, there is less distortion in telephone

signals. This is due to the fact that the greater the ratio of load impedance to valve impedance, the less is the signal distorted. This is referred to again later.

Adjustments of plate and grid, and filament voltages are made so that the valve is operating in the circuit under its best conditions.

When small signal voltages are applied to the valve from, say, the detector, the normal grid voltage is satisfactory if the return grid connection is made to the negative terminal of the filament battery, and a medium plate voltage and filament temperature is used.

When larger signal voltages are impressed on the grid, say, in the second stage of the amplifier, it may be necessary to use a larger plate voltage, and to join cells in the grid circuit, so that the grid is made more negative than the negative terminal of the filament battery.

For the third stage of the amplifier, the signal voltages applied to the grid may be so large, that the filament of the ordinary valve cannot supply a sufficient electron emission to enable the plate current to vary over the range required by the grid volts. In other words, the valve is overloaded, and the peaks of the signals are flattened. Consequently, a valve capable of giving a larger emission is used, and as we require *power* output, it must have a low mutual conductance to properly operate the loud speaker. Valves are on the market especially designed with the above characteristics, and should be used when power is required to satisfactorily operate a large loud speaker.

CHAPTER VI

THE THREE-ELECTRODE VALVE

A. The Three-Electrode Valve as a Rectifier

1. Referring to Fig. 39, it is clear that if an alternating voltage is applied to the grid circuit, when its normal voltage is that represented at the point A, that the positive portion of the voltage will cause a bigger increase in the plate current than an equal negative voltage will cause decrease. Thus, suppose the grid has a normal voltage of negative 2 volts (— 2 volts). The plate current is about 1 unit. Let the applied voltage change from + 1 volt to — 1 volt. When + 1 volt is applied, the grid voltage is increased to — 1 volt, and the plate current increases to about 3 units. The change in plate current is, therefore, 2 units.

When — 1 volt is applied to the grid, the total grid voltage is — 3 volts. The plate current is now only about 0·5 units, a reduction from the normal of 0·5 units. Thus the average plate current is increased by the difference between 2 units and 0·5 unit, that is by 1·5 units.

Let us join the valve to a receiver (Fig. 42). When a signal is received by the aerial, which is tuned by the condenser A and coil B, voltages are developed across the ends of the coil. The grid is given a normal potential, such as in the curve of Fig. 39, at A by means of the battery C. The telephones H

are connected in the plate circuit with the H.T. battery.

Suppose at one instant the voltage of the end of the coil, which is joined with the grid G, is positive by 1 volt. The plate current increases. The next instant the grid voltage is reduced by 1 volt, and the plate current is slightly reduced below normal. The nett effect of the voltages upon the grid, therefore, is that the average plate current increases, and so the telephone responds. This method of rectification is not much employed.

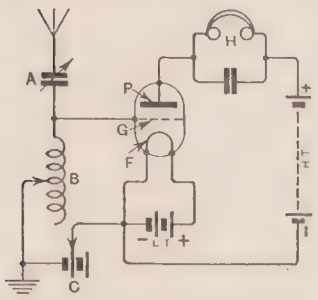

FIG. 42.—The method of connecting a valve for rectification through the curvature of the grid voltage-plate current characteristic curve.

2. Because any appreciable grid current causes damping and a lowering of the voltage developed across the tuning coil, the grid is usually made negative, and adjustments of anode potential and filament current are made to bring the mean grid potential to the point on the bottom of the plate-current grid-voltage curve where a given signal, impressed across the input circuit, produces the greatest *mean increase* in the filament-anode current. The rectifying action takes place because a given positive potential increment to the grid produces a larger increase in plate filament current than an equal negative potential causes reduction, and it is this balance of energy which is available to operate the instrument connected in the plate circuit.

It is to be expected that some types of valve will,

for a given input voltage, produce a bigger change in the plate current, and, therefore, a louder signal in the telephones than others. A suitable choice should be made.

The change in the plate circuit current varies approximately with the square of the applied grid voltage. That is, if 1 volt causes a change of 3 units, 2 volts will produce a change of, roughly, 12 units.

B. The Grid Condenser and Leak Method of Rectification

1. It is found that with most of the present-day valves stronger signals in the telephones are obtained when a small grid condenser and a high resistance is connected in the grid circuit. This grid condenser and high resistance is called the grid condenser and leak. With most ordinary receiving valves the correct value for the grid condenser is 0·0002 or 0·0003 microfarad, and the grid leak has a resistance of 2 or 3 megohms.

A simple receiver with a tuner and a valve rectifier is connected, as shown in Fig. 43. Referring to the figure, we have the tuner connected in the aerial circuit, consisting of a variable condenser A, and a variable inductance B. These have the usual values. The grid condenser and leak are marked C and D. It will be noticed that one side of the filament of the valve is joined with earth, and the grid is joined to one side of the grid condenser C. The plate of the valve is connected with one side of the telephones, H, and the telephone condenser, G. The other side of the telephones and condenser is joined with the positive terminal of the H.T. battery J.

2. When the grid of a valve is made positive with respect to the filament, a current flows in the grid circuit. The current is very small, of the order of a few micro-amperes, but, nevertheless, it is there. The larger the grid-voltage, the bigger is the grid current.

In Fig. 44 are plotted curves of grid current for different grid voltages. The curve marked 30 means

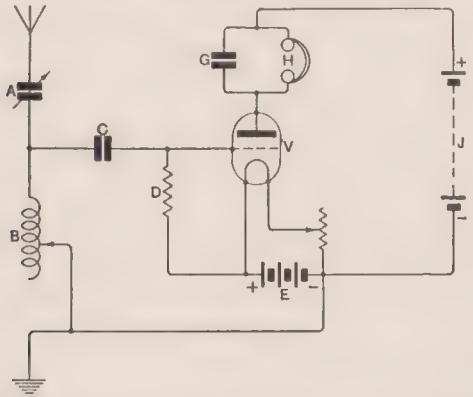

FIG. 43. The connections of a valve and grid condenser and leak for rectification.

that the plate voltage is fixed at 30 volts, and the grid currents are those obtained by varying the grid voltage. The curves marked 50, 70, and 90, refer to grid-voltage, grid-current curves taken when the plate voltages were fixed at these values respectively.

It will be noticed that the grid current is less for the higher plate voltages.

3. The method of rectifying, when a grid condenser and leak is used, depends upon the curvature of the

grid-current grid-voltage curves, and the characteristics of the circuit are so adjusted that grid current *does* flow from the filament to the grid.

4. Let us consider what happens when the aerial circuit receives a signal. Ignore for a moment the grid leak.

When the grid is made positive by the signal, electrons pass from the filament to the set of condenser plates joined to the grid. The electrons cannot escape into the circuit in any way, and are trapped on this set of condenser plates. When the next positive wave of the signal reaches the grid more electrons flow to the grid from the filament. These are also trapped by the plates of the condenser joined with the grid, consequently the grid becomes negatively charged; each positive pulse attracting more electrons to the grid and making it still more negative.

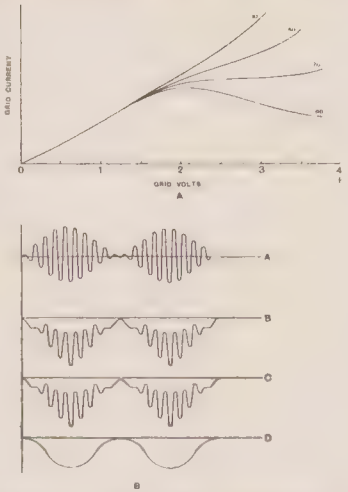

FIG. 44.—The upper curves are obtained by measuring the grid current produced by various grid voltages at fixed plate potentials. The lower curves, A, B, C, and D, refer to rectification.

Reducing the grid potential in this way causes the plate current to be reduced. It would be permanently reduced, but in practice a high-resistance leak is provided. The resistance value is chosen so that the electrons do not leak away during

the time of a high-frequency oscillation, but they do leak away in a time which is comparable with the time of the low-frequency variation in the amplitude of the received currents.

Referring to the curves* of Fig. 44, curve A represents the amplitude of the incoming signal voltages; curve B the grid voltages produced; curve C the plate current, and curve D the current which flows through the telephones. The curve C may be considered as made up of two portions—(*a*) the high-frequency component, and (*b*) the low-frequency component. The high-frequency component of the plate current passes through the telephone condenser. The low-frequency component passes through the telephones.

5. When telephony is being received, the voltages impressed upon the aerial consist of high-frequency oscillations which are modulated at low frequency in accordance with the operation of the microphone at the transmitter.

The shape of the envelope of the received voltages corresponds with the shape of the voltages produced by the microphone.

In curve A, Fig. 42, it is assumed that the high-frequency oscillations are modulated by a low-frequency sine wave voltage, and consequently the envelope of the plate current is a rectified sine wave.

When the envelope of the grid voltage has any other shape, depending on the signal, the shape of the plate current curve is different accordingly.

C. Best Adjustments

1. To ensure maximum rectification efficiency, adjustment must be made of the normal grid and

* H. J. Van Der Bijl, "The Thermionic Vacuum Tube."

plate voltages. The grid should be made positive with respect to the negative side of the filament battery, and for this reason the grid leak is connected between the grid and the positive terminal of the filament heating battery.

With some types of valves it has proved beneficial to make the grid more positive by connecting one end of the grid leak either to a few volts of the H.T. battery, or to a few separate cells which have their negative terminal connected to positive L.T.

Careful adjustments of the filament current and plate voltage should be made so that the steepest portion of the anode-current grid-voltage curve will be utilised. The latter adjustments also affect the shape of the grid current and grid voltage curves.

Using well-exhausted valves, the grid condenser and leak method of rectification gives results superior to any other.

The response produced in the anode circuit by the grid voltage varies over a small range approximately as the square of the voltage. That is to say, the rectification efficiency increases with the grid voltage.

2. *The Grid Condenser.*

The grid condenser should have a small capacity, in order that the energy which it receives may result in the largest possible voltage fluctuations, which in turn will give maximum signal energy in the anode circuit. On the other hand, it should not be so small that an appreciable radio-frequency voltage drop takes place across it. When " R " valves are used, 0·0002 μF. or 0·0003 μF. is suitable.

3. *The Grid Leak.*

To restore the grid potential to its normal value,

a leak is provided which will allow the charge to leak away to the filament during the intervals between signals. The leak should have no lower resistance than is necessary for it to perform its function properly, otherwise the grid voltage will be reduced unnecessarily. When signals are strong or when high-frequency amplification is used, the best all-round resistance is 2 megohms. For weak signals the resistance may be increased up to 5 megohms with a gain in signal strength.

4. The fact that the three-electrode valve and its associated circuits is capable of amplifying signals should not be lost sight of.

Besides the valve operating as a rectifier, it is amplifying as well. That is to say, the signal voltage changes on the grid produce a change in plate current which is several times greater than would be produced were the voltage applied directly to the plate circuit. Thus, if a certain grid voltage changes the plate current by one unit, and the amplification factor of the valve and circuit is five, it would be necessary to apply a voltage five times as great in the plate circuit to produce the current change of one unit.

This accounts for the fact that the valve rectifier gives so much louder signals than a crystal rectifier outfit. Besides the valve rectifying, it amplifies at the same time.

D. Reaction

1. *What is Reaction?*

We have described above how a small change in the voltage applied to the grid circuit produces a much bigger change in the plate current than would

be obtained if the plate voltage was varied by the same amount. In other words, the valve operates as an amplifier, a small amount of signal power applied to the grid circuit producing a much larger amount of power in the plate circuit. The plate current, of course, is derived from the plate battery, consequently the power is taken from the plate battery.

Ideally, the only difference between the input and output power is that the output power is many times greater. This assumes no distortion of the signals is produced through the process of rectification, and indeed, if careful attention is paid to the adjustments, this is nearly the truth. It must be clear that if a little of the output power could be transferred back to the grid circuit, the amount of energy in the grid circuit will be increased. This will be rectified and amplified by the valve, and result in much stronger signals than are obtained when no power is transferred back. To obtain this enhanced signal strength it is necessary to connect a device in the plate circuit which will result in the transfer of a little of the plate circuit energy back to the grid circuit, and further, the energy transferred back must *assist* that which is already in the grid circuit.

The effects described are those called reaction effects.

2. *How is Reaction obtained?*

To obtain these desirable effects we may do two things: (*a*) connect a coil in the plate circuit between the plate of the valve and the telephones, and place this coil close to a coil connected in the grid circuit; or (*b*) we may connect a very small condenser between the plate and grid.

Actually, there already exists in any receiving set an inherent reaction coupling because of (*c*) the capacity between the various connecting wires, pieces of apparatus, and the capacity between the elements, valve legs, etc., of the valve itself; and (*d*) there may be magnetic coupling due to the position of various components.

(*a*) The most common method of transferring energy from the plate circuit to the grid circuit is to connect a coil in the plate circuit. The coil is placed near the coil which is connected to the grid circuit, and energy is transferred by magnetic coupling. The closer the coils are together the tighter is the coupling, and the greater is the energy transferred. By mounting the coil so that its position relative to the grid coil is variable, we may control the extent of reaction by altering its position. The coil is referred to as the reaction coil.

The connections to the coil must be made so that the energy transferred assists that already in the grid circuit. To determine whether the connections are right, place the reaction coil away from the grid coil and listen to a signal. Now bring the reaction coil nearer the grid coil. If the signal is weakened, the coil is connected the wrong way round and the connections must be reversed. Then it will be noticed that the signal strength increases as the reaction coil is brought nearer the grid coil. Great care must be taken that so much energy is not transferred as will cause the signal to lose its characteristic tone.

The method of connecting a reaction coil is shown in Fig. 45. The reaction coil is marked, and the arrow which passes through it and the aerial coil, which is joined to the grid circuit, indicates that the

coupling is variable, that is, the coils are mounted so that the position of one with respect to the other is variable.

(*b*) Capacity reaction coupling is not greatly used in receivers designed specially for short wavelength work. If it is desired, however, to try this form of reaction coupling, it is only necessary to join one

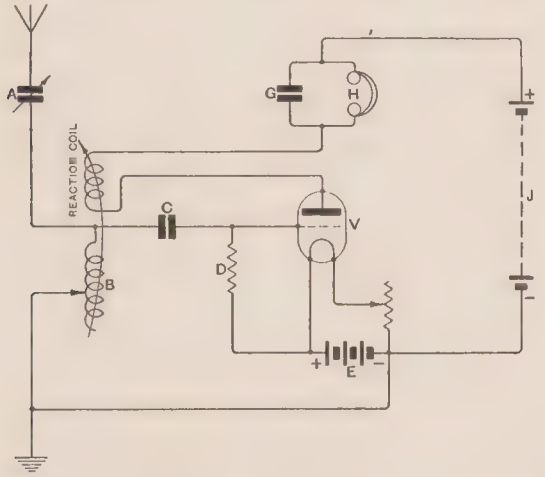

FIG. 45.—The method of connecting a valve to operate as a detector with reaction.

terminal of a very small variable condenser to the plate of the valve, and the other terminal to the side of the coil which is connected to the grid. A two-plate condenser, with small plates, will be satisfactory.

(*c*) The great difficulty in satisfactorily amplifying short wavelength signals is due to the inherent and accidental couplings between the output side of the valve and the input. This stray coupling exists in all amplifiers, and is a source of much trouble. Stray

couplings may be reduced by carefully spacing the wiring and the components. Thus, for example, the two filament wires should run close together; the grid wires should be as short as possible and run straight between the apparatus and the grid terminal of the valve; and the plate circuit wires should be kept well away from the grid circuit wires. It will be clear that if the plate and grid wires run together, they have appreciable capacity between them, resulting in a capacity reaction which cannot be controlled.

Coils, etc., in the grid and plate circuits should be spaced apart unless they are intended to be coupled together. Two coils which are mounted near one another, although not having any magnetic coupling, may have appreciable capacity coupling through which energy might be transferred.

E. Self-oscillation

1. If the circuits are so adjusted that the energy transferred back from the plate circuit to the grid circuit exceeds a certain amount, continuous oscillations are generated.

Let us see what happens as the reaction is gradually increased. At first, through the resistance of the grid circuit, the current flowing, and consequently the voltage set up across the coil, are limited. As the reaction is increased, energy is transferred to the grid circuit, which produces a corresponding increase in the plate circuit energy.

We may look upon the reaction as neutralising the effect of the grid circuit resistance. Clearly, if by redesigning the grid circuit we make the resistance losses very small, the current and voltage will be

much greater than they were before the circuit was redesigned. It is not possible, however, to construct the apparatus used in the circuit so that it has negligible resistance, so that the power output may always be increased by using reaction.

As the reaction is increased, the resistance of the circuit is further neutralised and the signals correspondingly increased in strength, until, with more reaction, the resistance may be exactly neutralised. When this happens the current in the valve circuits immediately rises to infinity. From Ohm's law, if the resistance is zero, and there is a voltage in the circuit, the resulting current will be infinitely great. In the case of the valve, the limit in the current is reached when the whole output of the valve is being used.

Now the circuit is generating oscillations, the frequency being determined by the constants of the circuit. That is, the current in the circuits will flow to and fro at the frequency determined solely by the value of the inductance and capacity used in the circuits.

When a circuit is generating oscillations in this manner, and the circuit is coupled to an aerial, energy may be radiated, and may be received by others who are listening, and their reception spoiled through interference.

Hence, reaction should be carefully used, so that interference is not caused to others. It should also be remembered that when reaction is employed *to such an extent that the valve is on the threshold of generating oscillations, telephone signals are horribly distorted*, on account of the currents produced being no longer proportional to the voltage.

2. The advantage of reaction is that weak signals may be strengthened by its use ; the disadvantages are that when not properly used the enjoyment of others who may be listening is spoiled, and further, the signals are badly distorted. It is a very good plan to do without reaction if possible ; at all events, never attempt to use reaction to such an extent that, with the slightest change in adjustment, the valve starts generating oscillations.

It will be observed that reaction operates to neutralise the effects of resistance. When reaction is applied to a circuit, therefore, the damping is reduced, and tuning may be much sharper.

3. There is another use for adjustable reaction. If a circuit is such that it oscillates without the assistance of a properly connected reaction coil, that is, if it oscillates as the result of stray coupling, we may connect a reaction coil to transfer energy from the plate to the grid circuit which acts in opposition to that already there. That is, we connect the reaction coil in the opposite direction to that in which it would be normally connected. This point should be borne in mind, as it is often useful.

4. The effect of stray coupling, especially that due to capacity coupling, is much greater on short wavelengths than on the longer wavelengths, and, indeed, the trouble is quite serious in that it is not generally possible to obtain more than a certain amount of amplification without producing continuous oscillations ; and, further, the amplification is much less than one would predict from a knowledge of the constants of the valve and circuits.

This has led investigators to produce special methods of obtaining high amplification.

In one case an attempt has been made, more or less successfully, to neutralise the stray coupling by means of specially arranged circuits,* and in another case the effect is lessened by using a special method of obtaining amplification.†

* "The Neutrodyne Receiver." See *Wireless World* of April 21st, 1923, also January 30th and February 6th, 1924.

† "The Armstrong Super-regenerative Receiver." See *Wireless World* of November 18th, 1922.

CHAPTER VII

THE VALVE AMPLIFIER

A. The Valve as an Amplifier

BECAUSE a small voltage applied to the grid circuit is many times more effective in producing a change in plate current than an equal voltage applied to the plate circuit directly, the valve is able to function as an amplifier. The valve may be used to amplify the signals before they are applied to the detector, or it may be used to magnify the ow-frequency signals produced in the output circuit of a valve or crystal rectifier.

In the case of high-frequency amplification, the coupling between valves will be designed to work properly with high-frequency currents. In the case of low-frequency magnification (or note magnification, as it is sometimes called) the coupling apparatus will be specially designed to work best at audible frequencies.

B. Conditions of Amplification

1. There is a general law of great importance, which may be stated as follows: The maximum power output is obtained when the resistance of the circuit which contains a load is equal to the internal resistance of the device which is delivering the power. In the case of the valve, the grid filament circuit has a very high resistance, and, in fact, when adjustments are made to prevent the flow of grid

current, the input resistance is infinitely great. The resistance of the filament plate circuit of the valve (the output internal resistance) is much lower, varying according to the adjustment of the plate voltage and grid voltage. In many cases it lies between 20,000 ohms and 80,000 ohms.

2. Referring to the curve of Fig. 39, the normal grid voltage must be fixed near the centre of the curve, in this particular case at about — 0·5 volt, so that an alternating voltage will produce *equal* increases and decreases in the plate current.

3. We conclude, therefore, that, so far as the input circuit of the valve is concerned, because it is possible to make adjustments which do not permit of grid current, the apparatus which is connected to the grid circuit should be designed so that it impresses the *largest possible voltage upon the grid.* No power is taken by the valve input circuit, because no current flows.

To obtain the largest possible voltage in the grid circuit, we may use one of several methods of connection.

C. High-Frequency Amplification

The Grid Circuit

1. Referring to Fig. 46A, the aerial circuit contains the tuning condenser C_1 and tuning coil L_1. It is very important to make adjustments which will ensure that the voltage applied between points A and B shall be as high as possible. This will be the case when the tuned circuit C_1 L_1 is tuned to the frequency of the incoming signal.

It is a property of tuned circuits that when they are in resonance with the signal, the voltage across the ends of the coil is a maximum. In general, the

voltage developed will be greatest when a large value of inductance is used, and as the combined inductance and capacity must have a certain value for resonance with a signal having a given wavelength, when the inductance is made large, the capacity is necessarily small.

These remarks apply with equal force whatever sort of aerial tuning arrangements are employed.

2. It is often possible to increase the voltage of the signal across points A and B by using a secondary circuit. The connections are given in Fig. 46B. The

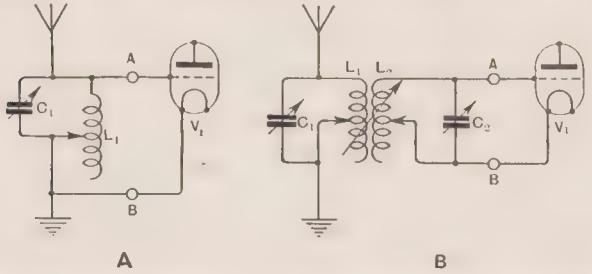

FIG. 46.—Two methods of coupling the aerial circuit with the valve V_1.

secondary circuit consists of a coil L_2 and a tuning condenser C_2. The coils L_1 and L_2 are coupled : that is, they are placed near one another so that the magnetic flux generated by coil L_1 links with the turns of coil L_2. When magnetic lines of force link with a coil in this way, voltages are set up in the coil, and when the circuit is completed (for example, through a tuning condenser), energy is transferred from one circuit to the other. If it is arranged that coil L_2 has more turns of wire in it than coil L_1, the capacity of the secondary condenser C_2 will be less than the capacity of the aerial circuit.

By making adjustments of the coupling, and tuning both circuits to resonance with the signal, the voltage developed across points A and B may be considerably greater for a given signal strength than in the previous arrangement. The arrow through the coils indicates that the coupling is variable. Coupling is changed by altering the position of the coils; for example, moving them apart reduces the coupling.

3. Finally, to obtain a high voltage across points A and B, a tuned circuit is used with preferably a large value of inductance and a small value of capacity. The voltage may be greater if a coupled circuit is employed.

4. It will be realised that the resistance of the aerial and secondary circuits ought to be as small as possible. Then the voltage generated by a given signal will be greater. It is possible to reduce the effective resistance of the circuit by coupling a reaction coil. Then the voltages generated across points A and B may be considerably increased, and at the same time the sharpness of tuning is increased.

To ensure that the grid takes no current, the grid return wire connected to B is taken to a point which has a suitable negative potential with respect to the filament. It will generally suffice if the return wire is joined with the side of the filament which is connected through the filament resistance to the negative terminal of the filament battery.

5. To obtain a bigger normal negative potential, the grid return wire may be joined to any point of the filament resistance, or to the negative terminal of the filament battery itself, the filament resistance being joined between the negative terminal of the battery and the filament.

2. The Plate Circuit

Bearing in mind the general rule given in section B.1 above, to obtain the maximum power-output from the valve, the effective resistance of the circuit which is connected should be approximately equal to the plate filament resistance of the valve. Let us suppose that we desire to connect a second valve to rectify the signal which is amplified by the first valve. For rectification we know that a grid condenser and leak resistance C and R, Fig. 47, may be connected to the grid circuit of the second valve. The effective resistance of the combination between points K—L is very high—perhaps in the neighbourhood of one million ohms, while the effective resistance of the plate filament circuit of the first valve is much lower, perhaps 20,000 to 80,000 ohms. Clearly, one cannot expect to obtain good results by just connecting the output circuit of V_1 with K—L, on account of the difference in resistances.

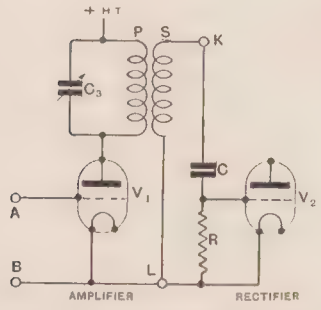

FIG. 47.—Connection of a high-frequency transformer.

D. Transformer Coupling

1. To match these resistances, a transformer may be used. The transformer should be designed bearing two things in mind. In the first place, we wish the maximum power to be delivered to the primary winding, and secondly, we desire the largest voltage

to be generated across the ends of the secondary winding.

If the two windings are properly chosen, the secondary will have many more turns than the primary. Unfortunately, it is not possible to wind transformers which carry high-frequency currents to work exactly in this manner. There is capacity between the turns of the wire in the coils themselves, and, very often, quite a large capacity due to the proximity of the primary and secondary windings, which is acting as a coupling condenser between these two windings.

These capacities cause two things: firstly, the transformer to have a natural frequency, the natural frequency of the secondary not necessarily being the same as that of the primary, and secondly, instead of the transformer behaving as an ordinary low-frequency transformer, where the energy from one circuit to the other is transferred by a magnetic coupling only, some energy is transferred by capacity coupling as well.

The effective resistance of the transformer windings will, therefore, be considerably different for different signal frequencies; and, of course, if the frequency of the signal happens to be the same as the natural frequency of the transformer windings, then the effective resistance of the transformer to this signal will be very high indeed. In addition to the transformer capacities there is the capacity of the valve and connecting wires to be considered.

2. If possible, it is better to use a special transformer in which the primary and secondary windings are spaced well apart, each winding being tuned to operate the high-frequency amplifier as a power

amplifier. Experimenters generally use high-frequency transformers, the windings of which are wound quite close together. For example, there is the pin type, in which both windings are wound in a single groove cut in a piece of ebonite, as in Fig. 48. The capacity coupling between the windings in this case is very high.

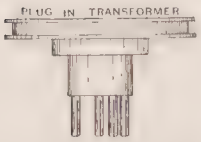

FIG. 48.—A pin-type plug-in transformer.

3. Instead of designing the valve and transformer as a power amplifier, it is better to wind the primary winding so that the *voltage* developed across its ends by a signal is as high as possible, and to use the secondary winding as a means of coupling the voltage generated with the input circuit of the next valve.

4. To obtain reasonable amplification when the valve is operated as a voltage amplifier, the effective resistance of the external plate circuit should be several times greater than the internal plate resistance. We know that a tuned parallel circuit offers a very high resistance when it is tuned to the frequency of the current, and that the voltage developed across the ends of the coil will be a maximum. We therefore connect in the plate circuit of the valve a coil, which constitutes the primary winding of the coupling transformer, and the winding is tuned with a variable condenser. As before, a high value of inductance is chosen, and a small value of capacity.

5 The secondary winding is wound so that the voltage given to the grid of the second valve is as high as possible. The secondary winding should there ore be tuned as well as the primary. It is

found, however, that when the primary and secondary windings are coupled closely together, that the effect of tuning the primary is to tune the secondary at the same time, so that provided the secondary winding has a suitable number of turns, both primary and secondary circuits will be tuned to exactly the same frequency by means of the one condenser.

As a rule, the condenser is connected across the primary winding.

The primary winding is therefore joined between the positive terminal of the plate battery and the plate of the valve, and the secondary winding between the point K and L as shown in Fig. 47.

It must not be thought that voltages are transferred from the primary to the secondary circuit by transformer action only. The two windings have considerable capacity between them, and energy is transferred through this condenser coupling.

When connecting the transformers in circuit, it is necessary to join them in a way which will result in the grid receiving the largest voltages, and the windings are connected so that the capacity and magnetic couplings assist. It is generally found that if both windings are wound in the same direction, the best connections are as follows :—

Beginning of primary winding to plate.
End of primary winding to positive of plate battery.
Beginning of secondary winding to filament battery, and
End of secondary winding to grid.

6. It should be expected that considerable losses may take place in the high-frequency transformers,

especially those which consist of two windings wound very close together. As before, the effective resistance should be kept as low as possible, and to this end the reaction coil may be coupled so that the effective resistance is made small. This considerably increases the voltages generated across the points K—L, and also sharpens the tuning, so that an interfering signal will not be amplified to the extent of the required signal.

E. Tuned Anode Coupling

1. It is considered by many that because it is difficult to construct a high-frequency transformer which will operate as a transformer ought (namely, as a device for stepping up the voltage from the primary to the secondary) it is better to remove the secondary winding altogether and to use the primary winding alone.

We have then the advantage that any losses which may be caused through the use of an inefficient transformer coupling are avoided, and instead of it being necessary to make two windings, which must be properly proportioned, we have only to take care of one winding, which is tuned to the frequency of the signal by means of a variable condenser.

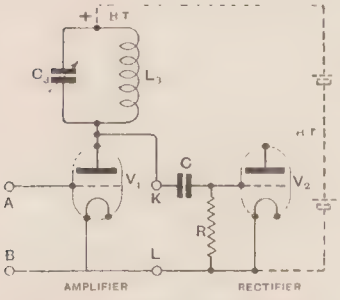

FIG. 49.—Tuned anode coupling.

2. If a tuned coil is joined in the plate circuit, and means provided for connecting the voltage set up

across its ends to the points K—L (Fig. 49), the arrangement is in effect a transformer with a one to one ratio, and the signal strength should be, if anything, a little more than before. It is the experience of many that the signal strength is greater when this method (called the tuned anode method of high-frequency amplification) is used. This may be due to the fact that losses take place in transforming the voltages from the primary winding to the secondary winding of the tuned transformer, whereas with the tuned anode method these losses are absent.

3. The action of the amplifier is as follows. Normally a steady current is flowing in the plate circuit, including the coil L_3 and the valve V_1, and there is a fall of potential between the plate and the filament, depending upon the plate current and normal grid voltage. An incoming signal sets up voltages in the aerial circuit, which are communicated to the points A—B and the grid and filament of the valve. The plate current is varied according to the magnitude of the signal voltages, the varying current being superimposed, as it were, upon the steady plate current. The varying current passing through the coil L_3 sets up voltages across its ends, because it is tuned to resonance with the signal, and therefore its effective resistance is high.

If the losses in the tuned circuit are small, the effective resistance is very high when it is tuned to the frequency of the signal applied to the grid, consequently the current variation may be very small, and may be zero if the effective resistance were infinitely great. The voltage set up in the circuit

would then be equal to the grid voltage multiplied by the amplification factor of the valve.

4. It is important to notice that when the anode circuit C_3 L_3 is sharply tuned, it is acting as a *rejector* circuit : thus, voltages which may be applied to the grid circuit as the result of an interfering signal, are not amplified. They will not be amplified because the effective resistance of the anode circuit to signals of frequencies other than the frequency to which the circuit is tuned, is small.

As before, the losses in the anode circuit may be made as small as one desires by the use of a reaction coil coupled to coil L_3.

5. The voltages set up across the circuit C_3 L_3 may be transferred to the grid circuit K—L of the rectifier by connecting K with the plate and L with the filament battery. This, in effect, is equivalent to connecting K—L directly across the coil L_3, so far as the signal voltages are concerned, because the plate battery is connected between the top end of the coil L_3 and the filament, as shown dotted in the diagram.

The purpose of the condenser is to prevent the anode voltage reaching the grid. The varying voltages, however, charge the grid of the valve without hindrance.

If the grid leak is joined to the positive terminal of the filament battery, valve V_2 will operate as a rectifier. If valve V_2 were to be used as a high-frequency amplifier following valve V_1, the grid leak would be joined to the negative terminal of the filament battery to reduce rectification of the signal.

Whenever a condenser is joined to the grid of a valve as a stopping condenser, it is always necessary

to connect a leak of some description to the filament, so that the grid may have a definite normal potential. If no leak resistance were provided, the voltage of the grid would not be a steady value, but would be determined by the charge which it accumulates.

F. Resistance Coupling

1. Instead of using a tuned plate circuit, we may connect a resistance R (Fig. 50) between the positive terminal of the plate battery and the plate. We have then the advantage that the resistance of the plate circuit remains *constant over a wide range of frequencies.*

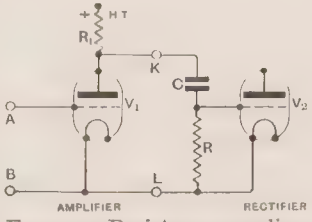

FIG. 50.—Resistance coupling.

2. As before, to obtain the greatest voltage amplification, the value of resistance used should be high. If the external resistance has a value of R ohms and the plate resistance is r ohms, the voltage amplification is equal to the amplification factor of the valve multiplied by R, the whole divided by $R + r$. For example, if the plate resistance r = 50,000 ohms, and the external plate circuit resistance R, has a value of 150,000 ohms, and a valve with an amplification factor of 10 is used, the voltage amplification obtained is equal to 7·5; that is, if the amplitude of the signal applied to the grid circuit is 1 volt, the voltage across the plate resistance will vary by 7·5 volts.

3. The disadvantages of the resistance method of amplification are, firstly, that a higher plate voltage is required on account of the normal voltage drop

across the plate resistance ; and, secondly, when very high-frequency voltages are amplified, the amplification is small on account of the effective resistance of the plate circuit being reduced on account of the stray capacities. There is, for example, the capacity of the circuit between points K—L (Fig. 50) across the plate circuit resistance. When the frequency is high, the impedance of the shunting capacity may be quite small, of the order of a few thousand ohms, and the higher the frequency the lower is the impedance.

The combined effective resistance of the plate resistance R and the stray capacity may, therefore, be very low ; consequently the resistance method of amplification is not considered satisfactory for amplifying signals with a frequency of above about 100,000 cycles (below 3,000 metres).

4. If the value of the plate resistance chosen is twice the average resistance of the valve, then under normal conditions, when no signal is being received, the drop across the plate resistance is two-thirds of the plate battery. For example, if the valve works best when a plate voltage of 50 is used, we should connect 150 volts to the end of the resistance, because approximately 100 volts will be absorbed in the resistance and 50 volts by the valve.

As before, the voltages developed across the plate circuit resistance are communicated to the grid of the next valve through a small capacity coupling condenser.

G. The Detector Valve

The Grid Circuit

1. The grid circuit connections are chosen with a view to the best rectifying action. This is obtained

by connecting a grid condenser and leak as shown in Figs. 47 to 50.

In the case where a transformer is connected to the first valve to operate as a high-frequency transformer coupled amplifier, Fig. 47, the grid condenser is connected with point K, and the other end of the transformer with the negative terminal of the filament battery. The leak resistance is joined from the grid to the positive terminal of the filament battery, to obtain best rectifying action.

2. When either the tuned anode or the resistance method of high-frequency amplification is used, it is necessary to apply the amplified signal voltage to the grid of the second valve through a small condenser. If the second valve happens to be the detector, then this condenser takes the place of the grid condenser ordinarily used in a valve detector. The high resistance leak is connected between the grid and the positive terminal of the filament battery for best rectifying action. If the second valve is to be used as a high-frequency amplifier, the resistance will generally be joined with the negative terminal of the filament battery.

The Plate Circuit

3. The plate circuit of a detector valve during reception carries a current which contains (*a*) a rectified high-frequency component, and (*b*) the low-frequency component of the signal, as well as the steady plate current.

The High-Frequency Current

4. We may, therefore, connect a coil in the plate circuit and couple it with any other coil, or all the

other coils, used in the high-frequency portion of the receiver for the purpose of coupling back energy, in order to increase the signal strength and to make tuning sharper. This coil—the reaction coil—need not be carefully tuned with a variable condenser, although in many cases it is an advantage to do so. It is chosen by trial and error, the right size depending upon the damping of the circuits, which is partly decided by the stray couplings brought about

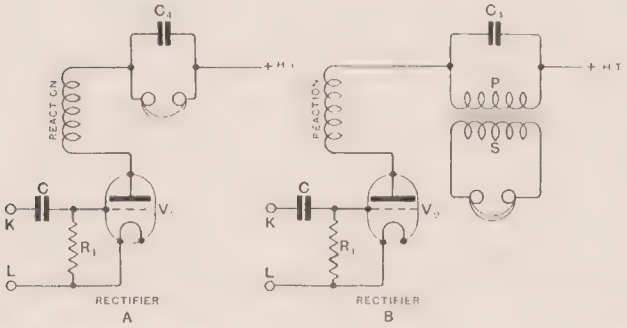

FIG. 51.—Connections of reaction coil, telephones and telephone transformer.

by the capacity between various elements of the circuit.

The coil is marked " reaction " in Fig. 51, A and B, which shows where it is connected.

The remainder of the circuit, so far as the rectified high-frequency component is concerned, consists of a small fixed condenser C_4, which is joined between the end of the reaction coil and either the filament of the valve directly, or to the positive terminal of the plate battery. With the latter connection the current passes through the plate battery to the filament.

The Low-Frequency Component

5. The low-frequency component of the rectified signal may be passed through a reproducing device, such as telephones, or, when the signal is to be magnified, through a coupling of some description to the input circuit of the next valve.

Let us consider the telephones are to be connected to the rectifier, Fig. 51A.

Telephones are *power* operated ; that is, power is required to cause them to respond. That being the case, from the general principle explained in section B1, on page 114, to obtain the greatest power output from the valve, the impedance of the telephones should be chosen so that it is approximately the same as the internal plate resistance of the valve.

Amplion loud speaker. (*Alfred Graham & Co.*)

The internal plate resistance is of the order of 20,000 to 80,000 ohms, consequently the telephones should be wound with many turns of wire. To keep the earpieces small, fine wire is used (in many cases No. 47 S.S.C.), so that they have a high resistance. Common values of resistance are 2,000 and 4,000 ohms. With two earpieces joined in series, the combined resistance is, therefore, 4,000 and 8,000 ohms.

There is the possibility that the fine wire coils of the earpieces will be damaged as the result of direct connection in the plate circuit. For this reason, many prefer to employ a transformer, the primary winding being joined in the plate circuit, and the secondary with the telephones (Fig. 51B).

The telephone transformer is so wound that the valve works into an impedance equal to its own plate resistance. The secondary winding is chosen so that its impedance is equal to that of the telephones.

It will be known that when a telephone signal is received, a band of frequencies is occupied, corresponding with the frequency range of the speech. Therefore, any coupling device connected in the plate circuit which carries audible-frequency signal currents should have a *flat-frequency characteristic*. That is, the coupling device must deal equally with each portion of the signal, irrespective of its frequency.

Unfortunately, it is not possible to wind transformer windings which have no capacity. On the contrary, the capacity is often considerable, and the result is that the windings of the transformer form a circuit with a natural frequency which is

determined by the values of the coil inductance and capacity.

From experience, the natural frequency is generally in the neighbourhood of 700 to 1,000 cycles. Consequently, each element of the signal is not amplified to the same extent, those elements which have a frequency near the resonant frequency of the transformer being generally reproduced in the secondary circuit with a larger amplitude in proportion with the remainder of the signal.

This effect may be avoided by using a carefully designed telephone transformer.

H. Low-Frequency Amplification

1. To amplify the audio-frequency signal we may proceed along the same general lines as in the case of high-frequency amplification, bearing in mind the difference between the apparatus used in high-frequency and low-frequency circuits. Thus, high-frequency transformers and choke coils consist of a winding with relatively few turns, while low-frequency transformers and choke coils, in general, consist of many turns of wire wound on an iron core.

2. There are three well-known methods of low-frequency amplification, employing resistance coupling, choke coupling, and transformer coupling.

3. The aim in low-frequency amplification is to amplify the signal without changing its characteristics in any way ; that is, the element of the signal delivered at the output terminals should be a faithful copy of the input, the relative amplitudes and phases remaining unchanged, in order that the characteristic tones of the signal are preserved.

I. Resistance Coupling

The Plate Circuit

1. As before, when resistance coupling is used, it is only necessary to connect a high resistance in the plate circuit between the plate of the detector valve and the positive terminal of the plate battery (Fig. 52). The value of resistance should be chosen in order that the largest possible voltages are set up across the resistance. This will be the case

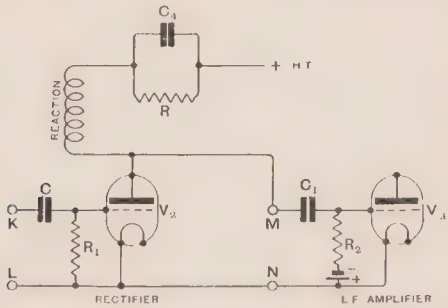

FIG. 52.—Connection of reaction coil and resistance coupling.

when the resistance has a value two or three times as large as the internal plate resistance. In practice, 100,000 ohms is generally used.

2. The operation is similar to that described in section F in connection with high-frequency resistance amplification.

3. It will be noticed that this arrangement has a flat-frequency characteristic; that is, elements of signal with different frequencies are amplified equally well. *This form of coupling is therefore very suitable for speech amplifiers.*

The Grid Circuit

4. The voltages set up across the resistance are connected to the input circuit of the next valve, V_3, Fig. 52, through a condenser C_1. The grid cannot be directly connected, because it would take up the potential of the plate of valve V_2, which would render the valve V_3 quite incapable of amplifying. The coupling condenser is given a fairly large capacity in order that it will pass on each element of the signal equally well.

It has been found experimentally that the best value lies between 0·02 μF. and 0·2 μF. Many prefer to use a condenser with a capacity of 0·02 μF. The insulation of this condenser should be perfect, and the losses very small.

When a grid condenser is used, it is essential to connect a high resistance between the grid and filament. This resistance, R_2, has preferably a value of 1 or 2 megohms, but lower values, such as 0·5 megohms to 0·2 megohms, are sometimes found more satisfactory, depending on the voltage applied to the plate circuit of valve V_3. The use of a resistance in this way fixes the normal grid voltage, and best results will generally be obtained if the resistance is joined with the negative terminal of the filament battery or to cells as shown in the figure.

The high-frequency component of the rectified signal is carried by the condenser C_4, which has a capacity of the order of 0·0002 μF.

J. Choke Coupling

The Plate Circuit

1. The method of connecting a choke coil to the plate circuit of valve V_2 is given in Fig. 53. The

choke coil X should have an impedance which is large at all the frequencies of the signal compared

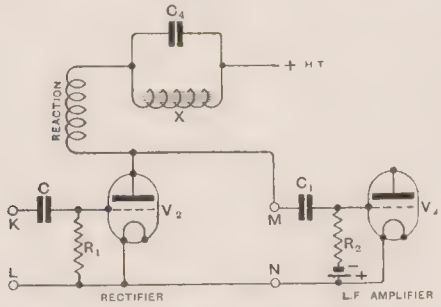

FIG. 53.—Choke coupling, with reaction coil.

with the internal plate resistance of valve V_2, thus permitting the largest possible voltage amplification.

2. If the impedance of the choke coil is twice as large as the plate resistance of the valve to which it is connected, the voltage amplification is about 90 per cent. of the maximum amplification of the valve.

It is desirable, however, to use a choke coil which has an impedance considerably larger than this in order that each frequency contained in the signal may be equally amplified, and it has been found that the amplification and quality is very satisfactory when the choke has an inductance of 100 henries. This is a large value of inductance, but if it is not used it is better to employ transformer coupling.

3. The choke may consist of 50,000 turns of No. 42 D.S.C. copper wire wound on a bobbin $3\frac{1}{2}$ inches long and $2\frac{1}{2}$ inches in outside diameter. An iron wire core, built up with No. 22 gauge soft

iron wire to a diameter of ½ inch, should pass through the centre of the bobbin; and the ends bent back over the outside of the winding, and fastened.

The Grid Circuit.

4. The voltages generated across the ends of the choke are communicated to the next valve V_3 through a grid condenser C_1. The capacity should lie between 0·01 μF. and 0·1 μF.; 0·05 μF. being a usual value. A resistance, R_2, of 1 or 2 megohms is joined between the grid of V_3 and the negative terminal of the filament battery or extra grid cells to maintain the grid at a suitable operating potential.

K. Transformer Coupling

1. Instead of employing a plate resistance or choke coil, a transformer may be connected with the primary winding in the plate circuit of valve V_2,

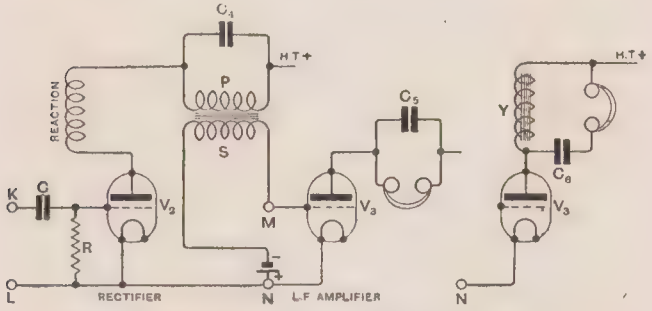

FIG. 54.—Transformer coupling, and two methods of connecting the reproducer.

and the secondary winding joined to the grid circuit of valve V_3. The valves are then used as power amplifiers. See Fig. 54.

The transformer should be designed so that the valve V_2 works into an impedance equal to its own resistance, and the secondary should be wound to apply the highest possible voltage to the grid of the valve V_3.

2. The proper operating potential of the grid of valve V_3 may be obtained by connecting dry cells, with the negative terminal connected to the return wire from the grid. The voltage will, of course, be chosen with regard to the plate voltage applied to V_3, and the object is to prevent the grid circuit taking current. Grid current will flow when the grid is made positive by the signal. If portions of the

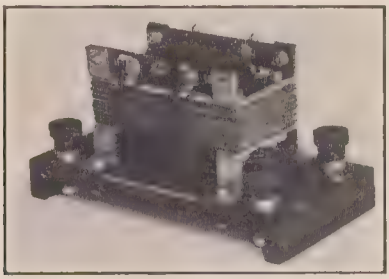

FIG. 55.—An intervalve transformer. (*Sterling Telephone and Electric Co.*)

signal set up grid current, the voltage immediately falls, with the result that the signal is distorted.

It is quite essential to shunt the secondary winding with a high resistance, preferably about equal to the impedance of the winding. With many transformers which are used by amateurs, this resistance should have a value of between 1·5 megohms and 0·5 megohm. High ratio transformers should be shunted with a resistance of 0·2 megohm.

Distortion in Transformer Coupled Amplifiers *

3. It is a very difficult matter to design a transformer coupled amplifier which shall have a reasonably flat frequency characteristic. The windings have capacity, besides inductance, and consequently, the transformers have a natural frequency. Each element of a speech signal cannot be equally amplified when the amplifier has an irregular frequency curve, and it is, therefore, not unusual to find that speech signals are distorted when a transformer coupled amplifier is used.

The conditions for best power amplification outlined above should be modified in order to obtain reasonably pure amplification. It is a common fault with many transformers that they have (*a*) far too few turns of wire, (*b*) a large step-up turn ratio, and (*c*) a poorly designed iron core.

(*a*) It is the experience of many that the best transformer, designed for coupling valves of the "R" or similar type, should have a total of about 40,000 turns of wire. Many which are sold have only about 15,000 to 20,000 turns.

(*b*) The best transformer ratio is probably $2\frac{1}{2}$ to 1 or 3 to 1. A ratio of 5 to 1 is considered much too high.

(*c*) The iron core should have ample cross section, and be provided with an *air gap* to reduce distortion.

(*d*) A good inter-valve transformer may be built as follows: core of No 22 gauge soft iron wire, 14

* The writer is aware of the distortion caused by the reproducer itself, but this is not discussed because beyond shunting with a small condenser, little may be done by the amateur to remove the distortion. Manufacturers are, in a few cases, able to offset the distortion produced by the amplifier and the reproducer.

inches long, built up to a diameter of $\frac{3}{4}$ inch; cheeks $2\frac{1}{2}$ inches in diameter by $\frac{3}{16}$ inch thick, mounted $3\frac{1}{2}$ inches apart on the core. Wrap a few layers of empire cloth over the core between the cheeks, and wind on 9,000 turns of No. 42 enamelled and single silk-covered wire for the primary winding. Cover this winding with two or three layers of good empire cloth, and wind 27,000 turns of No. 45 enamelled and single silk-covered

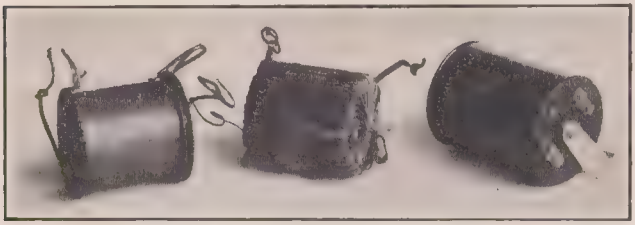

FIG. 56.—Illustrating partly finished and a completed inter-valve transformer. (*Marconi Scientific Instrument Co.*)

wire for the secondary winding. Wrap two layers of empire cloth over the outside, and then turn back the ends of the iron wire core all around the surface of the windings and fasten them in place with fibre straps.

A good transformer of this description is illustrated in Fig. 56.

It is usual to connect the windings so that the self-capacity acts to reduce distortion.

4. In Letter Circular 98, issued by the Bureau of Standards, Washington, is a report on the amplification characteristics of a number of transformer coupled amplifiers. The amplifiers were tested to determine the amplification when the input voltage had various frequencies.

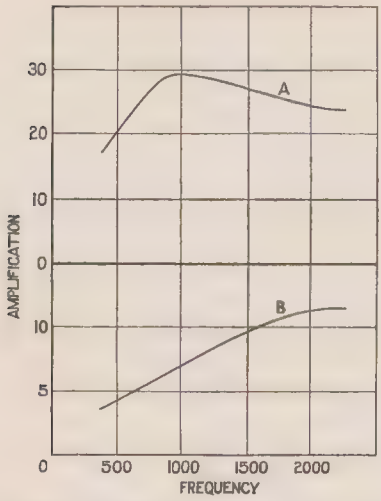

FIG. 57.—Voltage amplification characteristics of a single valve note magnifier.

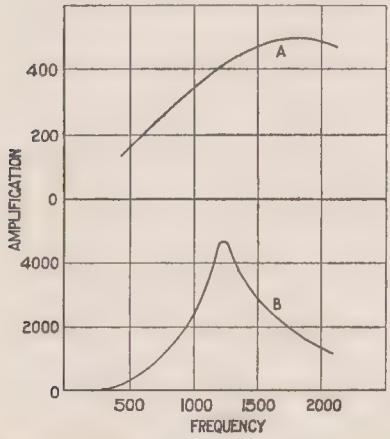

FIG. 58.—Voltage amplification characteristics of a two-stage note magnifier.

The curves of Fig. 57 and Fig. 58 are typical curves showing the amplification obtained when a constant voltage, but with various frequencies, was applied to the input of the amplifier. The curves of Fig. 57 were obtained using a single stage of low-frequency amplification. In the curve marked B, the amplification increases rapidly from a frequency of 300 up to 2,500. In the curve marked A the amplification is highest when the input voltage has a frequency of about 1,000 cycles.

The curves of Fig. 58 were taken with a two-stage note magnifier. Curve A shows that the amplification increases rapidly with the frequency. Curve B shows that this amplifier has a very marked resonance peak.

Clearly, with amplifiers of this sort, the quality of received signals is very poor.

Improving Quality

5. The quality may be improved at an expense in amplification by (*a*) shunting the secondary windings with a resistance, between 0·5 megohm and 1·5 megohms ; (*b*) by shunting the primary with a fixed condenser, the best value of which must be found by trial ; and (*c*) by providing an air gap in the iron core. The right gap should be determined by experiment.

The best amplifier for the magnification of speech signals is a resistance coupled amplifier, because it amplifies signals containing frequencies from two or three hundred up to several thousand cycles per second without favouring any particular frequency. The sort of plate resistance generally used is illustrated in Fig. 59.

The amateur who builds his own receiver will be most successful if he constructs a resistance coupled note magnifier, paying attention to the proper adjustment of the normal grid and plate voltages.

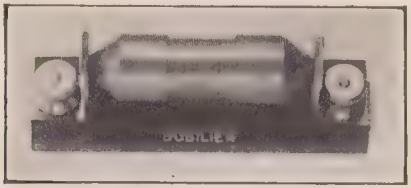

FIG. 59.—An anode resistance. (*Dubilier Condenser Co.*)

6. A transformer amplifier, which is often more satisfactory than the simple arrangements generally used, called a push-pull amplifier, is shown in Fig. 60.

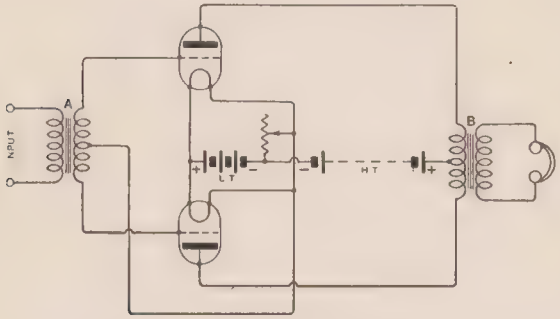

FIG. 60.—A push-pull amplifier.

Here the secondary winding of transformer A is split, and the ends taken to the grids of the valves. The plate circuit winding of the transformer B is also split as shown, and the telephones are connected to the secondary winding of B.

The Plate Circuit

7. The reproducer—telephone or loud speaker—is connected in the plate circuit of V_3, Fig. 54, as described before in connection with Fig. 51. When direct connection is preferred, high-resistance telephones or loud speaker must be used.

If it is thought the normal plate circuit current may damage the windings, or make the operation less satisfactory, a choke coil, such as Y (Fig. 54), and a condenser, C_6, may be connected. The steady current will now flow through the choke coil, and the signal currents through the condenser C_6 and the reproducer. The choke coil should have a large inductance, of the order of 100 henries, and the condenser may have a capacity of 0·05 to 2 μF. A resistance of the order of 100,000 ohms may be used instead of the choke coil if preferred.

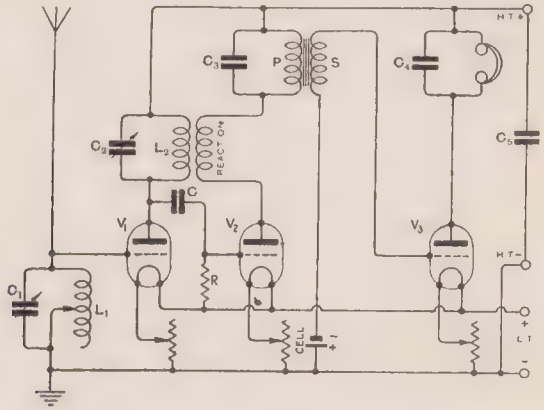

FIG. 61.—Connections of a complete three-valve receiver.

Connections of a Complete Receiver

The connections of a three-valve receiver are given in Fig. 61. The first valve operates as a high-frequency amplifier with a tuned plate circuit L_2C_2. The second valve is the detector, with grid condenser and leak C and R. In its plate circuit are joined the reaction coil, which is coupled to the plate coil of V_1 and the primary winding of an intervalve transformer. The secondary winding is joined to V_3. A condenser, C_5, is connected across the plate circuit battery.

Readers desiring further information on resistance, choke and transformer coupled low-frequency amplifiers are referred to the author's articles in *The Wireless World and Radio Review* of February 6th and 13th, 1924.

CHAPTER VIII

HOW TO ASSEMBLE THE RECEIVER

We do not propose to give precise instructions for the lay-out of wireless receivers on account of many readers probably having components by them which they would prefer to use in place of those which it would be necessary to employ if constructional drawings were given. Therefore we illustrate and describe one or two well-known instruments.

A. Two-Valve Receiver

This receiver consists of a tuner with one stage of high-frequency amplification followed by a valve rectifier. Referring to the illustration, Fig. 62,* the aerial and earth terminals are in the centre of the top of the panel, and the valve holders just below.

The left-hand condenser is the aerial tuning condenser. The aerial coil may be seen in the back view in the top right-hand corner.

The condenser on the right-hand side of the front view, marked "secondary tuning condenser," is connected across the plate coil and forms the tuned anode circuit. The coil is shown between the variable condensers in the back view. The centre knob and dial, marked "Reaction," controls the position of a reaction coil, which is mounted so that it may be

* Photographs by permission of *The Wireless World* and Messrs. L. McMichael, Ltd.

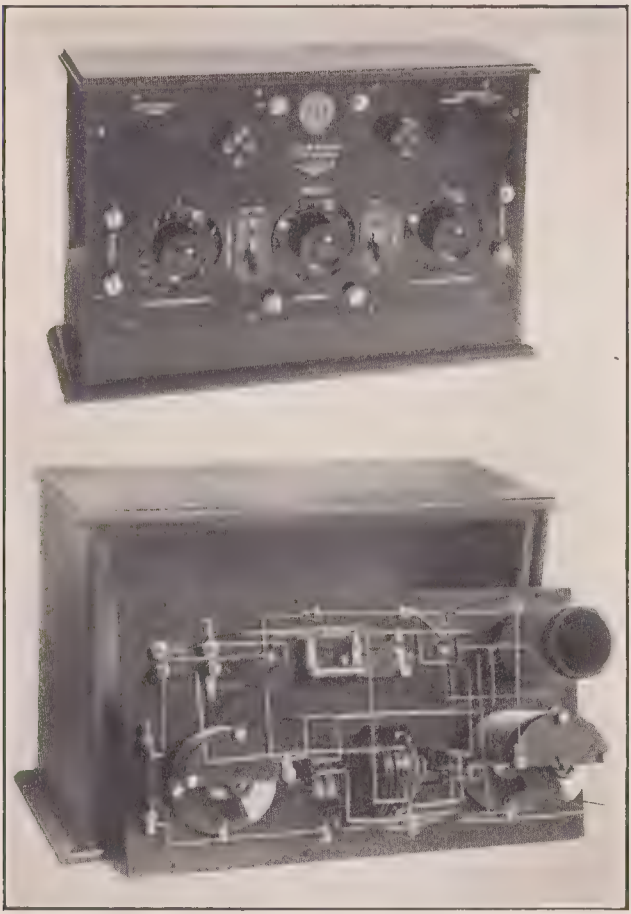

Fig. 62.—A two-valve receiver with one stage of high-frequency amplification, and valve detector. (By permission, *The Wireless World*, and *Messrs. L. McMichael, Ltd.*)

rotated inside the anode coil. It is inside the centre coil shown in the back view.

The grid condenser and leak are connected in the usual way for rectification. The side terminals are for the filament heating and plate circuit batteries. Telephones are connected to the lower pair of terminals.

A switch, marked "on and off," is joined in the battery circuit. The other switch, marked "Range switch," connects the aerial condenser in series, or parallel with the aerial coil, and changes the number of turns in the coil which are connected in circuit.

To increase the wavelength range, plug-in coils may be fitted to the aerial, plate, and reaction circuits.

Notice the method of wiring the receiver.

B. Two-Valve Note Magnifier

The two-valve note magnifier is illustrated in Fig. 63. The terminals are arranged for easy connection to the tuner-amplifier unit.

The position of the coupling low-frequency transformers and the fixed condensers is clearly shown.

Switches are provided to vary the number of valves in circuit.

Both instruments give excellent results, and are shown here as an example of plain, straightforward design.

Notice the back of the instrument is finished off just as carefully as the front. For wiring, No. 16 gauge tinned copper wire is used, which is bent to shape and soldered.

C. Three-Valve Receiver

A number of wireless manufacturers are prepared to supply a complete set of parts, including the cabinet and panel for quick assembly and wiring by the Home Constructor. The panel is provided

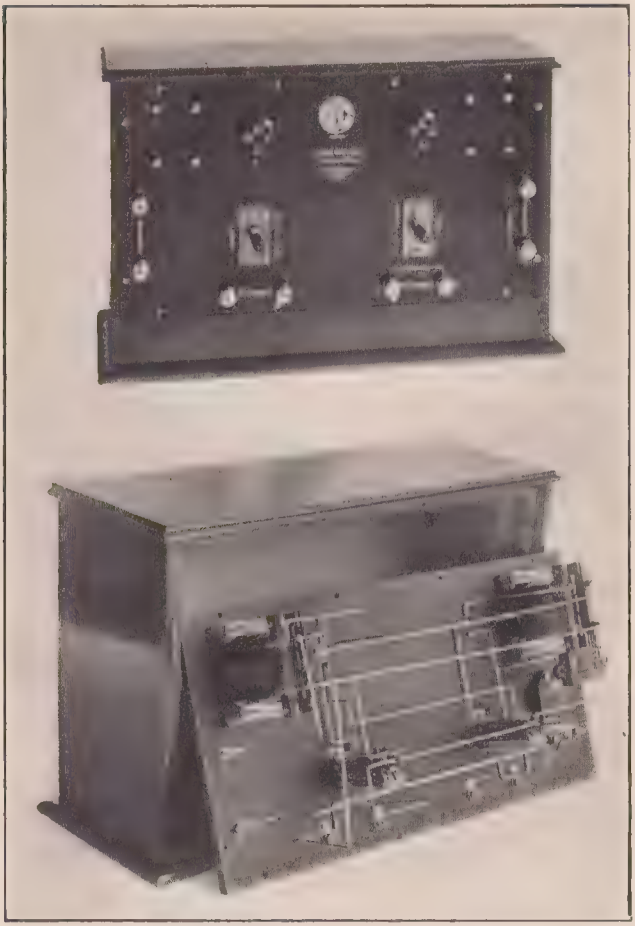

Fig. 63.—A two-valve note magnifier. (By permission, *The Wireless World*, and *Messrs. L. McMichael, Ltd.*)

already drilled, so that one only needs to assemble the parts and wire up according to the diagram supplied.

Those who are about to construct their own receiver are strongly advised to purchase a complete set of parts in this way, because, in the first place, all the components are of equal quality and designed to work one with the other, and, secondly, the

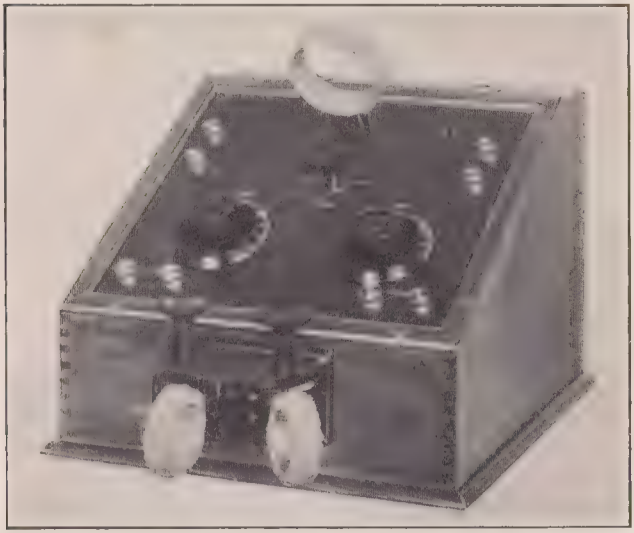

FIG. 64A.—A three-valve receiver, with one stage of high-frequency amplification, detector and note magnifier. (*Messrs. Burndept, Ltd.*)

finished instrument has a good appearance and cannot be distinguished from a commercial receiver.

The receiver described below is supplied by Messrs. Burndept, Ltd.

Construction

The photographs, Fig. 64, A and B, show the appearance of the completed instrument and the components which are used in the construction. The

different parts will be easily identified. Referring to Fig. 64A, the top left-hand terminals are for the aerial and earth. The bottom left-hand terminals are for the telephones and the right-hand ones for the loud-speaker, and are also suitably marked for the connection of the positive terminal of the plate battery. The negative terminal of the plate battery, along with positive terminal of the accumulator, is connected with the upper right-hand terminal, and

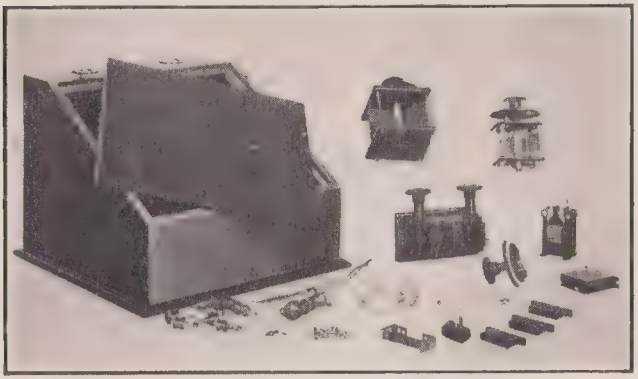

Fig. 64B.—The components used in the construction of the receiver illustrated in Fig. 64A. (*Messrs. Burndept, Ltd.*)

the negative terminal of the accumulator is taken to the remaining terminal.

The filament temperature is controlled by the filament resistance in the centre of the panel.

The upper plug-in coil is the aerial coil, and is tuned with the aerial condenser on the left-hand side of the panel. The two-coil holder accommodates the anode and reaction coils, and the anode coil is tuned with the right-hand variable condenser.

The receiver has one valve operating as a high-

frequency amplifier, tuned anode coupled; valve rectifier with reaction, and one note magnifier.

Wiring

The connections of the receiver are given in the diagram of Fig. 65A, and a photograph of the wiring in Fig. 65B. The aerial coil A is a No. S2 Burndept coil for broadcast wavelengths, and is tuned by con-

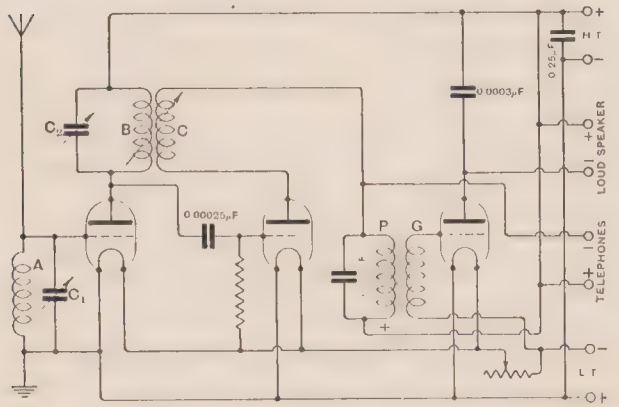

FIG. 65A.—Wiring diagram of the three-valve receiver of Fig. 64A.

denser C_1 maximum capacity 0·00075 μF. The anode coil B is a No. S4, and is tuned with a variable condenser C_2, maximum capacity 0·00025 μF. The tuned anode circuit is coupled with the detector valve by the 0·00025 μF. grid condenser, and the grid leak, resistance 2 megohms.

The reaction coil C is connected in the plate circuit of the detector valve between the plate and the terminal marked P of the intervalve transformer. The other terminal of the intervalve transformer

winding marked + is connected to the positive terminal of the plate battery. The secondary winding is connected with the grid and filament battery of the third valve.

In the plate circuit of the note magnifier (the third valve) is connected the loud-speaker. The terminals are arranged so that when only two valves

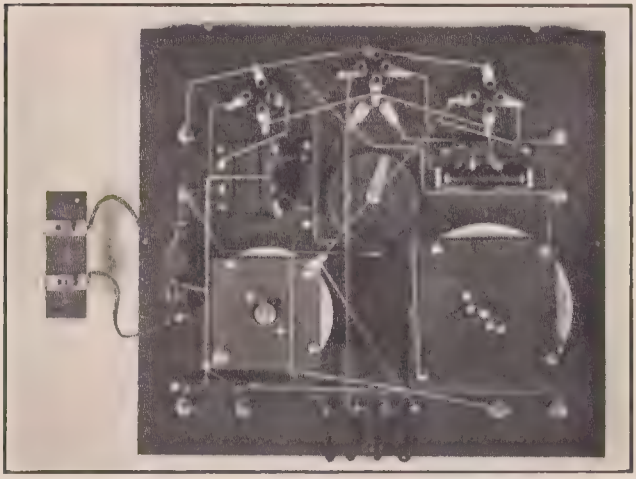

Fig. 65B.—The back view of the three-valve receiver of Fig. 64A. (*Messrs. Burndept, Ltd.*)

are wanted in circuit, the telephones are connected to the terminals marked telephones. The third valve is then not in circuit. When the telephones or loud-speaker are connected to the terminals marked loud-speaker, all three valves are in use.

The grid connections are made as shown in the diagram, for the purpose of allowing a small grid current to flow, so that the circuits are a little damped. This gives stability. The damping is neutralised so

far as the signal tuned in is concerned by the reaction circuit.

Operation

Light the valves, connect the plate battery, and insert the plug-in coils.

With the reaction coil coupled fairly tight, tune with both condensers, holding one knob in each hand. A slight rustling noise will be heard when the condensers have a certain setting, and when tuning both knobs should be turned together so that this noise is heard all the time.

When a whistle is heard, make adjustments so that with a small movement of the condensers, the whistle rises in pitch with either direction of turning. Now adjust the reaction coupling at the same time varying slightly the anode condenser. The telephony will be perfectly tuned in if this procedure is followed.

D. A Unit Receiver

Many amateurs prefer to build their receivers on unit lines, starting, say, with a tuner unit and a valve detector unit, and later adding a high-frequency amplifier, and perhaps a note magnifier.

The arrangement is shown diagrammatically in Fig. 66. The units are labelled. The connections of the components are made so that the tuner and detector may be used together ; the high-frequency amplifier panel may be added between the tuner and detector, and/or the note magnifier panel added. If a second stage of note magnification is required, one may be constructed and wired exactly as that shown in the figure.

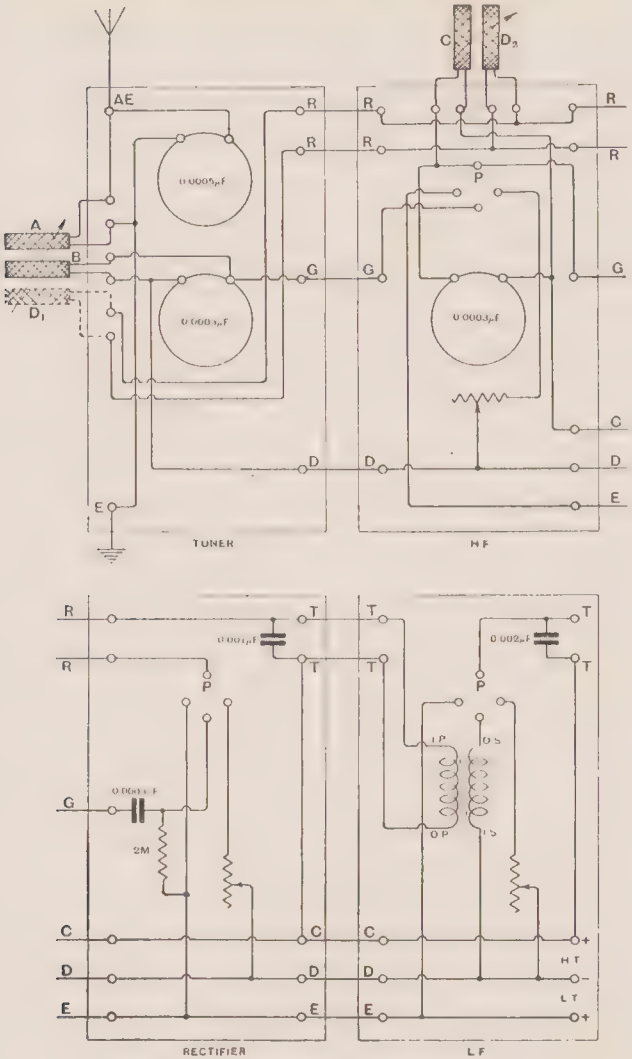

Fig. 66.—A three-valve unit receiver.

The connections are drawn looking through the top of the panels as it were.

Construction

The tuner contains a three-coil holder to accommodate the aerial, secondary, and reaction coils, and the aerial tuning and secondary circuit condensers. Values are marked.

The tuned anode method of high-frequency amplification is used, the coil C in the second panel being the anode coil, which is tuned with the variable condenser marked 0·0003 μF. Reaction may be obtained by connecting a coil at D_2. It is arranged that the reaction coil may be coupled with either the aerial circuit or the tuned anode circuit by plugging in the coil where required.

The rectifier unit has a grid condenser and leak, 0·0003 μF. and 2 megohms connected in the grid circuit. Reaction coil terminals are provided, and telephone terminals. Telephones may be connected to the terminals marked T.T.

To add a note magnifier, a unit is built, as shown in the figure, and connected up. It contains an intervalve transformer for coupling.

The panels may be about 9 inches long by $4\frac{1}{2}$ inches wide and 5 inches deep. It may, however, be better to purchase the components first, and then to lay them out and be sure they can be accommodated in the panel.

Operation

The receiver is operated as described on page 152.

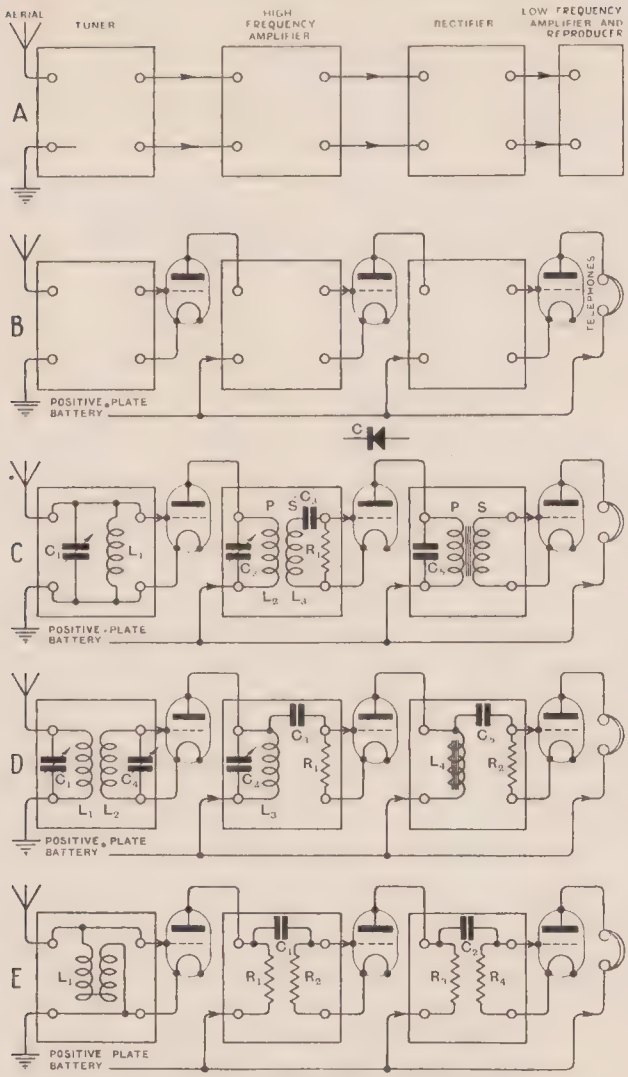

Fig. 67.—Explaining amplification.

E. Circuits of Receivers

1. The diagrams in Fig. 67 are given to show the essential connections of a three-valve receiver. Starting with the top diagram A, the aerial and earth are connected to a tuner ; the output is connected with the input circuit of a high-frequency amplifier. The amplified signal then passes to a rectifier, is rectified and applied to the input circuit of the low-frequency amplifier, where it is magnified and operates the reproducer.

In diagram B, the valves are shown removed from the units. Notice how they are connected, and the direction of the arrows. The plate circuits receive their energy from a dry cell battery, and are always connected with the positive terminal. A crystal, C, may be used in place of the valve detector.

Diagram C gives the connections of suitable coupling units. The tuner contains a tuning coil L_1 and tuning condenser C_1. The high-frequency amplifier coupling is a tuned transformer, the tuning condenser being marked C_2, and the transformer coils L_2 and L_3. For rectification a grid condenser C_3 and leak resistance R_1 are connected.

The output from the rectifier is taken to the primary winding of the low-frequency intervalve transformer P. To carry the radio-frequency component of the plate current the condenser C_5 is connected. The secondary of the transformer, S, is joined to the third valve, and telephones are connected in the plate circuit.

In diagram D, alternative couplings are shown connected. Thus, the aerial circuit and first valve are coupled through a loose coupler, coil L_1 and condenser C_1 tuning the aerial circuit, and coil L_2 and

condenser C_4 the secondary circuit. The first valve is coupled to the detector valve with the tuned anode coil, consisting of coil L_3 and condenser C_2, and the grid condenser and leak, C_3 and R_1. Thus the second valve operates as a rectifier. The output circuit contains a choke coil L_4, and is coupled to the last valve through the condenser C_5 and leak R_2.

Diagram E gives another method of coupling the valves. The aerial circuit is tuned with a variometer L_1, which is connected to the input side of the first

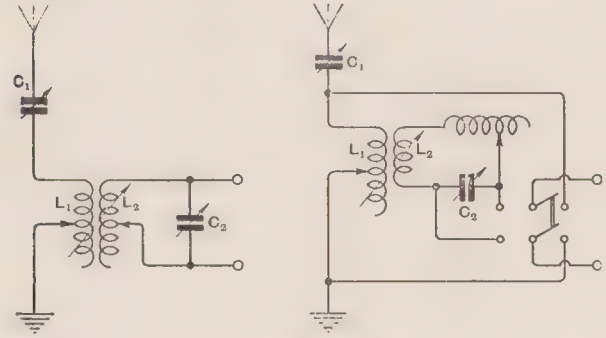

Fig. 68.

valve. Resistance amplification is used, so that a resistance R_1 is connected in the plate circuit, and a coupling condenser C_1 with leak resistance R_2. The low-frequency signals are also amplified through a resistance coupling R_3, and the grid condenser C_2 and leak resistance R_4.

It must be understood that any form of coupling may be used in conjunction with any of the valves. That is, the tuner of E may, for example, be connected with either of the circuits C and D, or the resistance coupling of E may be connected with either C or D.

2. Below we give the connections of a number of the better-class receivers. The reader should have no difficulty in constructing receivers if he understands the principles underlying reception given in earlier sections.

FIG. 68. —The left-hand figure gives the connection of a simple loose coupler. The right-hand figure shows the method of connecting a "tune-standby" switch. With the switch blades to the left, the secondary circuit is connected to the terminals; when the switch blades are to the right, the aerial circuit is connected.

FIG. 69.—The method of adding a single-valve note-magnifier to a crystal set. Connect the primary

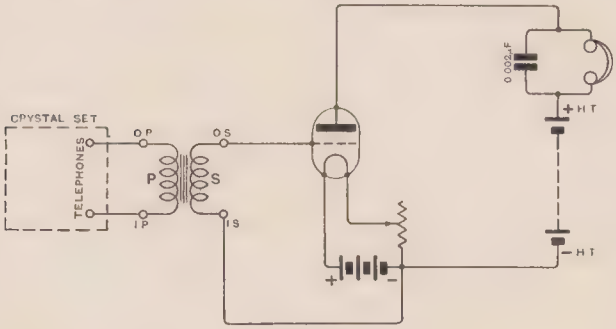

FIG. 69.

winding of an intervalve transformer to the telephone terminals of the crystal set, and connect the secondary winding to the grid and negative terminal of the filament battery. The plate circuit contains the high-resistance telephones and the high-tension battery.

FIG. 70.—The upper diagram gives the connection of a two-valve note-magnifier, and the lower diagram the schematic connection. The primary winding of

the first transformer may be connected in place of the telephones of a crystal receiver or a valve detector.

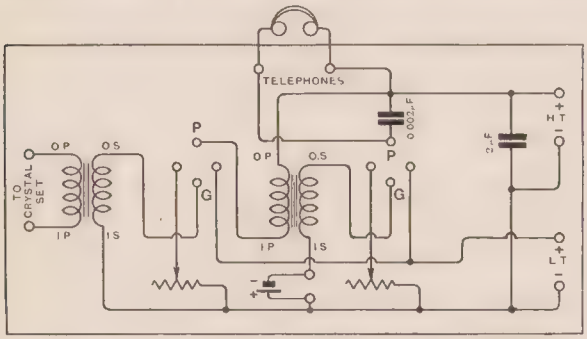

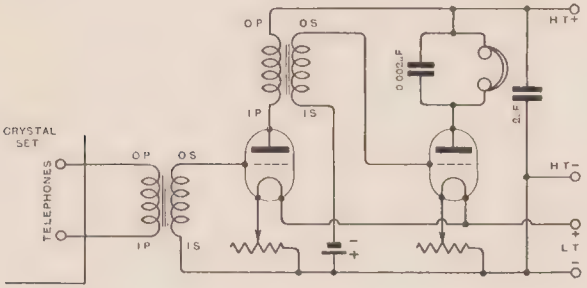

Fig. 70.

Fig. 71.—The method of adding a single-valve note-magnifier to a valve detector. The transformer primary is connected to the telephone terminals of the valve detector, and the secondary to the grid and filament of the next valve. Connections are made as shown by the dotted lines.

Fig. 72.—Connections of a two-valve receiver with one stage of high-frequency amplification and valve detection. The aerial and plate circuits are tuned with variometers marked A and B.

FIG. 73.—A two-valve receiver with one stage of high-frequency amplification and valve detection.

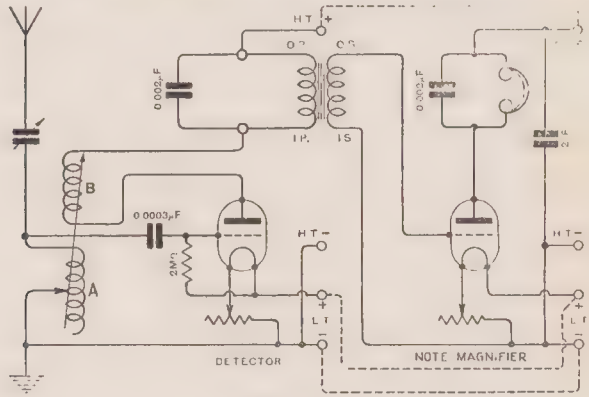

FIG. 71.

The aerial circuit is tuned with the condenser, which may be joined in series or parallel with the plug-in

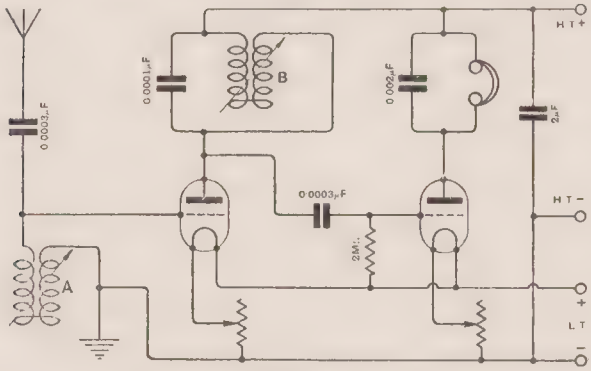

FIG. 72.

coil A. The tuned anode circuit consists of the plug-in coil B and tuning condenser.

Fig. 74.—This circuit is an improvement on Fig. 73, because a coupled tuner is used, giving very good

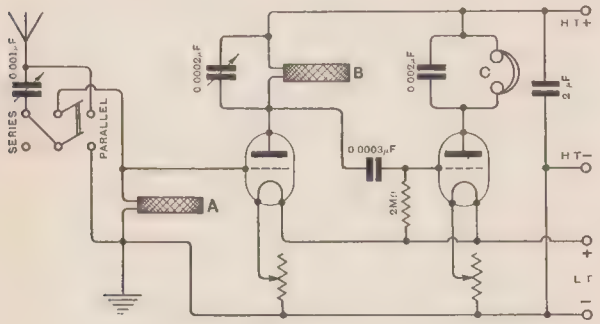

Fig. 73.

selectivity, and a reaction coil D is coupled to the anode coil C, giving sharper tuning and louder signals.

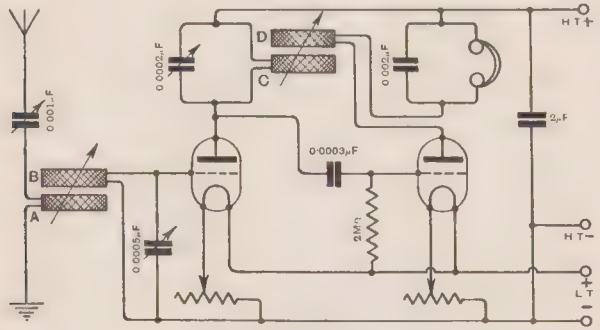

Fig. 74.

Fig. 75.—A receiver consisting of a valve detector with two stages of note magnification. The reaction coil is coupled with the aerial coil.

Fig. 76, A and B.—Examples of, A, high-

frequency transformers, and B, a filament resistance.

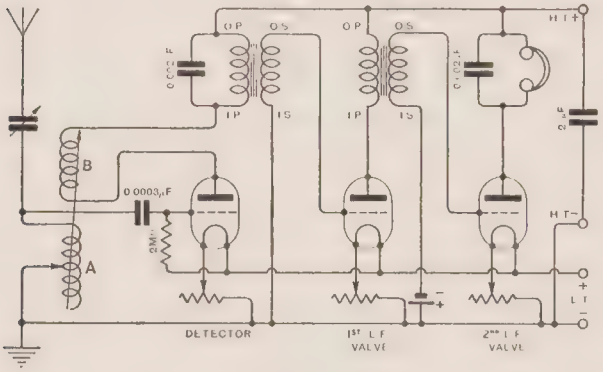

FIG. 75.

FIG. 77.—A receiver with one stage of transformer-coupled high-frequency amplification, valve detector

FIG. 76A. (*Adastral Wireless Mfg. Co.*)

and note magnifier. The grid condenser C and leak R have values of 0·0003 μF. and 2 megohms. If the

transformer T is of the type shown in Fig. 48, for the broadcast wavelengths it may be constructed as

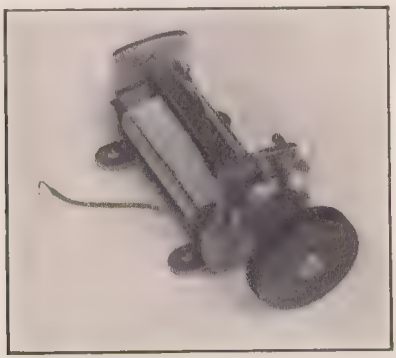

Fig. 76B. (*Marconi Scientific Instrument Co.*)

follows: Outside diameter $2\frac{1}{2}$ ins.; slot $\frac{5}{8}$ in. deep and $\frac{3}{16}$ in. wide; primary winding, 120 turns of

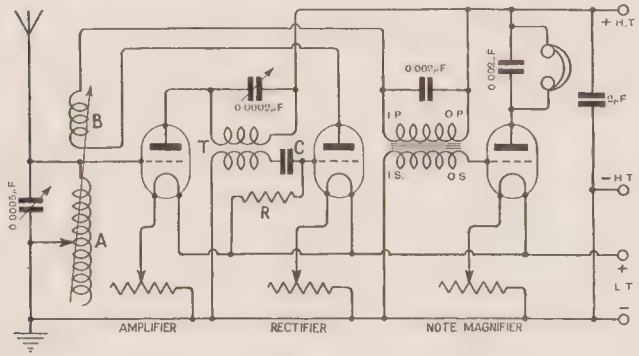

Fig. 77.

No. 30 D.S.C.; secondary winding same as primary. As an alternative the transformer may be wound as follows: Ebonite tube 2 ins. diameter and $2\frac{1}{2}$ ins. long. Wind the primary winding on first, with 150 turns

of No. 30 D.S.C. Then wrap a layer of paper or empire cloth over this winding, and wind on the secondary, which should also have 150 turns of No. 30 D.S.C. wire.

FIG. 78.—A three-valve receiver. The reaction coil may be coupled with either the anode or closed

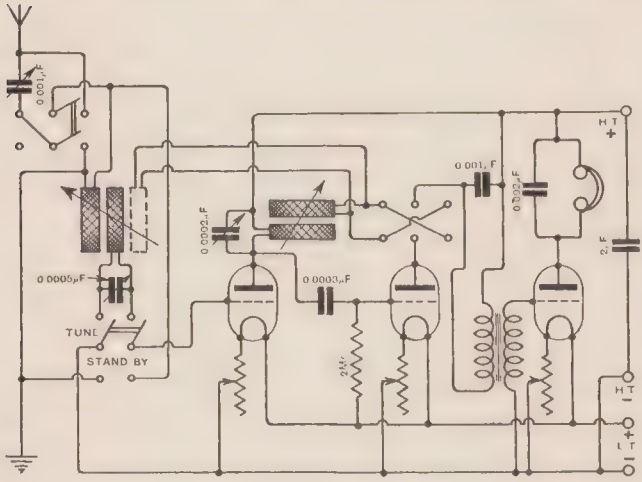

FIG. 78.

circuit coils. A reaction coil reversing switch is connected.

FIG. 79.—The method of connecting a three-valve receiver with one stage of high-frequency amplification, valve detector, and note magnifier. The aerial circuit is tuned with the variometer A. Switches are provided to cut out the first and/or last valves as required, and several connections are shown dotted for ease in following the diagram.

FIG. 80.—The method of connecting a potentio-

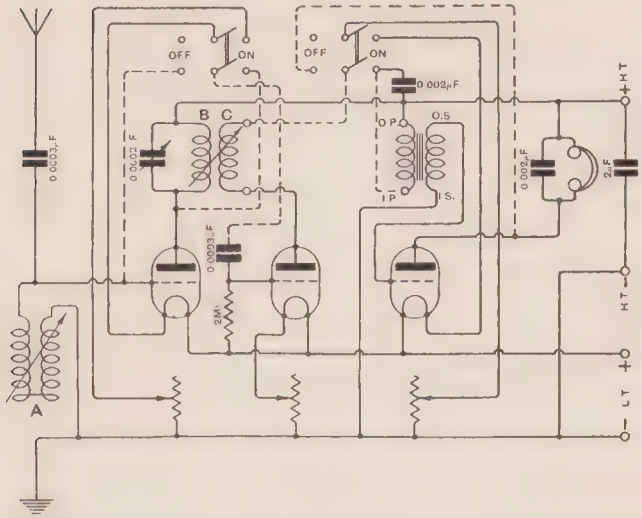

Fig. 79.

meter E, and different voltages to the plate circuit. Referring to Fig. 81, a number of grid voltage-plate

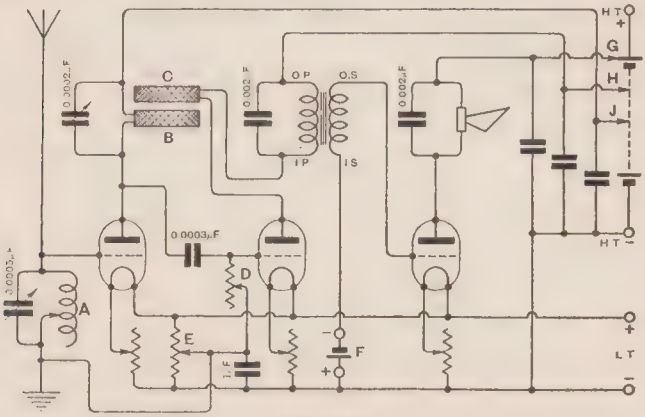

Fig. 80.

current curves are given for various plate voltages. The higher the plate voltage, the larger is the negative voltage which should be connected to the grid circuit to bring its normal operating point to the centre of the curve. The dotted line passes through the centre

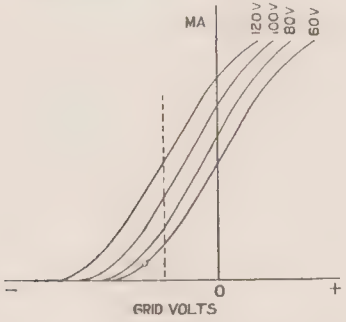

FIG. 81.

of the 120 v. curve, and it is seen the grid circuit requires a negative potential at this point.

Therefore, when it is desired to connect different voltages to the separate plate circuits, the grid voltage must be adjustable. This is the reason for the use of the potentiometer and the cells F. Notice a fixed condenser (0·5 μF.) is joined between each plate circuit and negative L.T.

Faults

A. Noise

1. Noise may be produced through either the receiver or the aerial. To locate, listen in the telephones with the aerial and earth off.

2. When the receiver suddenly becomes noisy it is often found that a connection is loose. Bump the receiver, and notice if a noise is made ; if so, there is

probably a connection loose. Examine all external connections, such as the batteries and telephones.

If the noise gradually develops, probably the dry-cell battery is faulty. It should be shunted with a large condenser—a 2 μF. Mansbridge is satisfactory.

A very harsh noise is probably due to a bad grid leak.

3. It should be remembered that any loose connection in the receiver, or a leakage between connections, will produce noise. It is perhaps unnecessary to point out that, after connections are soldered, they must be very carefully cleaned. Flux is a conductor and responsible for much noise.

See to all tappings and moving connections to switches or variable condensers.

Sometimes the insulation of condensers, either fixed or variable, becomes faulty. This may be determined by removing suspected components.

4. A clicking noise is generally caused by a leak with a too large value of resistance. Try a new one.

B. No Signals

1. Carefully check up the coils and condensers used for tuning to find whether they are suitable for tuning in the signals required.

2. Examine the aerial and earth, and make the connections satisfactory.

3. Light the valve filaments, and be sure the filament temperature is sufficiently high, or, test the accumulator with a voltmeter. Connect the plate battery and measure its voltage if possible ; if not, when the connection is made, so long as one of the valve circuits is correct, a small spark may be observed.

4. Clean all the valve legs, and make sure they fit in the sockets properly.

5. Go over the connections thoroughly, looking for a wrong connection, bad joints, and disconnections.

C. Signals Weak

Probably the accumulator or the dry cell battery is exhausted. If signals were satisfactory, but are now weak, the fault probably lies here.

D. Howling

1. A high-frequency whistle may be due to inherent back coupling. If so, rearrange the wiring, with special attention to the grid and plate connections.

Many amateurs use a reaction coil with far too many turns, making the reaction coupling adjustment very critical.

2. A low-frequency howl may often be cured by shunting the low-frequency intervalve transformers with a resistance of about 0·5 to 1·0 megohm. Also, by reversing the connections on one side of the transformer, and shunting the primary winding with a fixed condenser of value between 0·001 and 0·005 μF.

E. Aerial and Earth Noises

If the receiver is installed close to an electric power supply or machinery, noises may be heard as the result of induced currents or earth currents.

Attend to the aerial and see that it is as far away as possible from the disturbance.

The earth should receive special attention. If possible, use a buried plate and an insulated earth wire connection. Sometimes it is necessary to receive using no earth at all, especially when earth currents may be large.

Be sure the aerial insulation is satisfactory.

CHAPTER IX

SENSITIVE SINGLE-VALVE CIRCUITS

It generally happens that most of us, at any rate, having built a receiver which gives more or less satisfactory results, are not satisfied to just tune in the broadcast transmissions and leave the set alone and listen. We want to try to receive the signals better. Consequently it is thought that many would like to experiment with sensitive single-valve arrangements, and leave the receiver alone for the purpose of receiving broadcast transmissions. The single-valve circuits are chosen because many have an extra valve, and very few parts are needed to fit up the circuits. Therefore below we give particulars of a number of circuits which have the property of requiring very skilful tuning and which often give results, in experimenter's hands, which are little short of wonderful.

We wish to emphasise the fact that all the arrangements given have been properly tested out and used by a number of experimenters, and there is no reason at all why others, with limited experience, should not build one of these very sensitive sets for the fun to be got out of delicate adjustments and receiving the signals of far-distant stations.

A. Single-Valve Amplifier with Crystal Rectifier

1. *General Principles.*

A very simple receiver, which will give good results without calling for the delicate adjustments so

necessary for the successful operation of some others, to be described, is shown in Fig. 82. The circuit, briefly, consists of a valve connected in a circuit to operate as a high-frequency amplifier, reaction being obtained by coupling the coil L_2, joined in the plate circuit, with the coil L_1, joined in the grid and aerial circuits. Signals are rectified by the crystal detector D, and operate the telephones shunted by the condenser C_3. The aerial circuit is tuned with con-

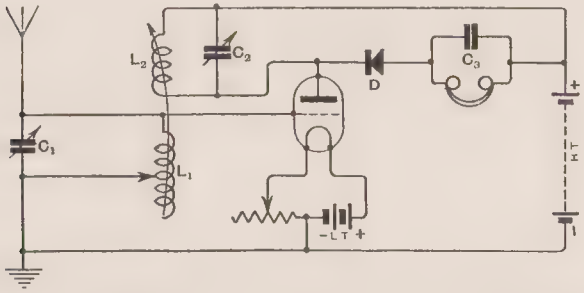

FIG. 82.—A single-valve receiver with one stage of high-frequency amplification with crystal detector and reaction.

denser C_1 and coil L_1. The plate circuit is tuned with the condenser C_2 and the coil L_2.

2. *Construction of the Set.*

The aerial condenser may have a maximum value up to 0·0005 μF., the smaller the maximum value the better.

The coil L_1 may be either a cylindrical coil or a plug-in coil. For broadcast reception, make it 4 inches in diameter by 5 inches long, wound with No. 20 D.C.C., with 9 or 10 taps. If a plug-in type coil is preferred, use a No. 35 or No. 50.

The plate circuit, consisting of coil L_2 and con-

denser C_2, must be designed to tune over the same band of wavelengths as the aerial circuit. Condenser C_2 should have a maximum value of 0·0002 μF., and the coil L_2 may be a cylindrical coil, $3\frac{1}{2}$

A crystal and valve receiver. The plug-in coil is a long wavelength loading coil. (*Sterling Telephone and Electric Co.*)

inches in diameter and 5 inches long, wound with three times as many turns as the aerial coil with No. 28 or 30 D.S.C. wire. Make about 10 tappings, and arrange this coil so that it slides inside the aerial coil. Alternatively, if it is preferred to use plug-in

coils and a 2-coil holder, the aerial coil being a No. 35 or No. 50, the plate coil will be a No. 75 or a No. 100.

The coils are arranged so that the distance between them is variable ; in other words, so that the coupling is variable.

The crystal rectifier B should be carefully chosen. Those with a wire contact (cat-whisker) often give the most satisfactory results.

The telephone condenser has the usual value of 0·002 μF.

3. *Operation.*

The signal is tuned in by adjusting condensers C_1 and C_2 together, with the coils together. A simpler method, perhaps, is to set C_1 at some value, and then slowly rotate C_2. Proceed like this until a signal is tuned, and then move the coils L_1 and L_2 apart, as described on page 152.

Carefully adjust the crystal, and be equally careful over the adjustment of the coupling between the coils L_1 and L_2.

" R " type valves are satisfac ory.

B. Single-Valve Double Magnification Receiver

1. *General Principles.*

It is a simple matter to modify Fig. 82 so that, in addition to the valve operating as a high-frequency amplifier, it operates as a note magnifier as well. The rectified current, instead of being passed through the telephones, is passed through the primary winding of an intervalve transformer, and the secondary winding is connected to the input circuit of the valve, which amplifies the rectified signals.

Referring to Fig. 83, which gives the connections, the aerial circuit is tuned with the condenser and coil C_1 L_1. The anode circuit is tuned with the condenser and coil C_2 L_2. The crystal rectifier D is connected with the primary winding of the intervalve transformer, marked O.P. and I.P. The secondary winding, marked O.S. and I.S., is connected with earth on one side, and the bottom of the coil and con-

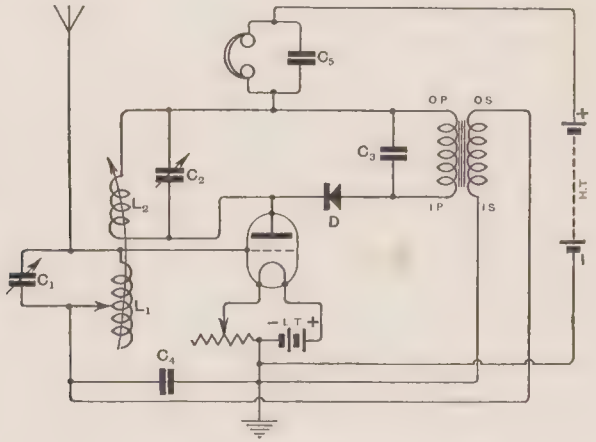

FIG. 83.—A double-magnification receiver with a tuned anode high-frequency circuit.

denser on the other. Notice the position of the telephones. Reaction is obtained as before.

2. *Construction.*

The coils L_1 and L_2, and condenser C_1 and C_2, have the same values as given above for the simple high-frequency amplifier.

The intervalve transformer may be of any type,

preferably one which has a small ratio, such as $2\frac{1}{2}$ to 1, or 3 to 1.

Condenser C_4 has a critical value. In general, it should be either very small, 0·0002 μF., or rather large, 0·003 μF.

The condensers C_3 and C_5 have each a value of about 0·002 μF., the values not being at all critical. Notice the method of connecting the transformer.

3. *Operation.*

This circuit normally requires about 100 volts of high-tension battery for best results.

To tune in a signal, tune the aerial and plate circuits together as before, with the coils together. When a signal is heard, adjust the coupling between the coils carefully ; and, finally, attend to the crystal rectifier.

It is generally found that a light contact between the catwhisker and crystal is best. If the contact between the wire and crystal is firm, signals are rather weak. As the contact pressure is reduced, the signal strength increases. If the contact is made very light, however, the circuit generally oscillates.

If there is a tendency for the circuit to howl, proceed as follows : (*a*) Loosen the coupling, that is increase the distance between coils L_1 and L_2 ; (*b*) reverse the connections of the secondary winding of the transformer ; (*c*) alter the value of C_4, trying different values ; (*d*) reduce the plate voltage.

It may be found that the circuit does not give increased signals when the coupling between L_2 and L_1 is increased. This is because coil L_2 is connected the wrong way round ; therefore reverse its connections.

C. Single-Valve Double Magnification Receiver

1. *General Principles.*

Another receiver which gives very excellent results, when carefully handled, makes use of a valve which operates as a high-frequency and a low-frequency amplifier at the same time, with a crystal rectifier. This receiver differs from that described in section B in that a high-frequency transformer is employed.

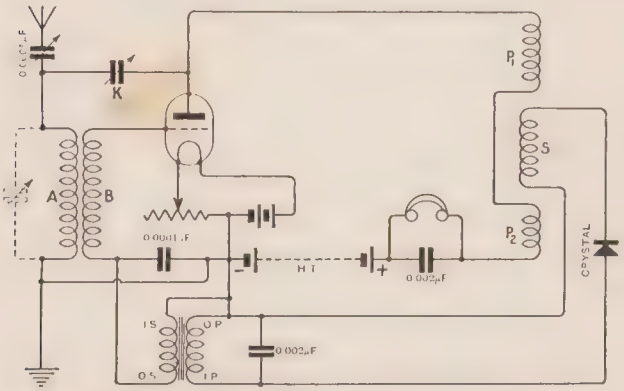

FIG. 84.—Another double-magnification receiver with a transformer high-frequency circuit.

Referring to Fig. 84, the aerial circuit is tuned with a variable condenser which may be connected in series or parallel with the tuning coil A. The closed circuit consists of a coil B only. In the plate circuit are joined the primary windings, P_1 and P_2, to a high-frequency transformer, the high-resistance telephones and telephone condenser, and the plate battery. The secondary winding of the high-frequency transformer is connected with a crystal rectifier and the primary winding of the intervalve

transformer. The secondary winding of the transformer is connected between the filament and the secondary coil B. The condenser K is for the purpose of providing reaction effects.

2. *Construction.*

The aerial condenser may have a maximum value of 0·0005 μF. Coils A and B may be basket or cylindrical coils. If basket coils are preferred, wind 45 turns of No. 22 D.C.C. on a former, 1½ inches in diameter, with 9 spokes for coil A; and for coil B wind 90 turns of No. 30 D.S.C. on a former, 3 inches in diameter, with 9 spokes. The two coils should be tied together.

If the cylindrical type of coil is preferred, wind 40 turns of No. 22 D.C.C. for coil A on a tube, 2 inches in diameter, and wind alongside it 120 turns of No. 30 D.S.C. for coil B

The primary winding of the high-frequency transformer, P_1 and P_2, may consist of two basket coils, each having 75 turns of No. 42 S.S.C. wound on a former, 1½ inches in diameter, with 15 spokes. For the secondary winding, S, wind 100 turns of No. 42 S.S.C. on a former of the same size as the primary. The windings are *not* tuned with a condenser. Place the secondary winding between the two primary windings, and join the latter in series with the windings in the same direction.

A crystal rectifier of the cat-whisker type is satisfactory.

Suitable condenser values are marked in the figure.[1]

A hard valve, such as the "R" type, is satisfactory with 70–100 volts in the plate circuit.

[1] See the "Wireless World," of August 22nd, 1923.

The variable condenser, K, may have two small plates, separated about $\frac{1}{4}$ inch.

3. *Operation.*

Place a test buzzer near the receiver, and endeavour to tune in the buzzer note, and adjust the crystal. Then tune in a signal, and when it is heard, carefully adjust the crystal again, and the reaction condenser K. Try the effect of varying the number of turns in the high-frequency transformer, and also the distance between the coils. It will be found there is one best number of turns in the windings of the high-frequency transformer, and this may only be found by trial. Unfortunately it is not possible to specify exactly the correct number of turns to be wound in the basket coils. It is found that the method of winding has a considerable effect on the constants of the coil.

D. Reinartz Single-Valve Receiver

1. *General Principles.*

This receiver was developed especially for the reception of short-wavelength signals. In common with other sensitive receivers reaction is used, and it is possible to radiate energy from the aerial. The receiver should not be used for long periods connected with an outdoor aerial, and experiments with it ought to be conducted after broadcast hours.

The object of the receiver is to amplify very weak amateur transmissions.

The circuit is given in Fig. 85. It will be noticed the valve is connected with a grid condenser and leak for rectification. Starting from the aerial connections the aerial circuit is completed through

the switch and turns at A to earth. The tapped part of the coil B is tuned with the condenser C and forms the secondary circuit. The coil D, which is coupled with the aerial coil A, is the reaction coil, the amount of reaction being varied by altering the position of the tapping switch. The condenser E connects the aerial terminal with the reaction coil, and is for the purpose of providing another

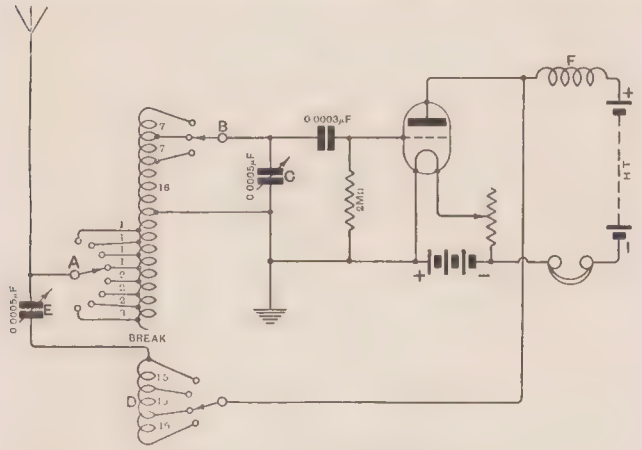

FIG. 85.—A Reinartz receiver.

reaction adjustment. The grid is joined with the switch connected to coil B, and the filament with earth. In the plate circuit is a choke coil F, which is connected in series with the telephones and battery. The telephones should not be shunted with a telephone condenser.

2. *Construction.*

To wind coils A, B and C, take a tube 3 inches in diameter and wind a total of 88 turns of No. 20 D.C.C. wire in one continuous winding. Starting

at one end take taps for the coil B at 7, 7, and 16 turns. Next take taps from the following turns: 1, 1, 1, 1, 2, 2, 2, 3. Now cut the wire through at this point and take the end to the first stud of the taps at D. Take the taps at 15, 15, and 15 turns. That is to say, a single-layer continuous winding is wound on a 3-inch tube and taps are taken as indicated in the diagram. The winding, however, is cut through at the point marked "break" in the diagram.

Instead of using a cylindrical coil, many use a basket coil. This should have an inside diameter of 2½ inches and nine spokes. Wind 88 turns and take tappings as above, with one continuous winding, and afterwards cut the wire at the number of turns marked "break." The portion of the coil marked B is taken from the inside of the basket coil.

The wavelength range covered will be from 120 to 390 metres approximately.

The coil F, which is a choke coil, may be a basket coil of about 100 turns of No. 30 D.S.C. wire. Any winding with about 100 turns, 2½ inches in diameter, will do here. This coil is kept away from the proper tuning coils, and its purpose is to force the high-frequency currents to flow through the coil D and condenser E instead of passing through the capacity of the telephone windings to the filament.

3. *Operation.*

To operate, set switch A at any point, and with condenser E at a small value adjust the secondary circuit consisting of coil B and condenser C. Proceed with different settings of switch A until a signal is heard, then carefully adjust coil D and condenser E.

The circuit is very sensitive, and a little practice is necessary before best results are obtained. After a while, however, it is easy to make adjustments.

It is recommended that an indoor aerial, consisting of an insulated wire passed round the room, be used in place of the outdoor aerial.

E. The Flewelling Receiver

1. *General Principles.*

Another very sensitive receiver, which gives enormous amplification of weak signals and employs the super-regenerative principle, is called the Flewelling Receiver.

The diagram is given in Fig. 86. Referring to it, we have a tuned aerial circuit with condenser C_1 and coil L_1. The grid condenser is C_2 and the variable grid leak R_1. The reaction coil is marked L_2. This is, so far, an ordinary detector valve with reaction, and indeed if we short-circuit the condenser marked C_4 and remove condenser C_5 may be operated as a simple reaction receiver.

It is the purpose of the three fixed condensers C_3, C_4 and C_5, together with resistance R_2, to provide the reaction effects which give the circuit its sensitivity.

Notice the method of joining the condensers and the position of the telephones.

2. *Construction of the Circuit.*

Condenser C_1 may be variable up to about 0·0003 μF., although good results will be obtained if its maximum value reaches 0·0005 μF.

The aerial coil L_1 for short wavelength work may be a tapped coil, such as described before, that is,

4-inch diameter and 5 inches long, wound with No. 20 D.C.C. with nine or ten tappings; alternatively, it may be a No. 35 or a No. 50 plug-in coil. The reaction coil L_2 may be a cylindrical coil to couple with the cylindrical aerial coil as above, or a plug-in coil. If the cylindrical coil construction is preferred,

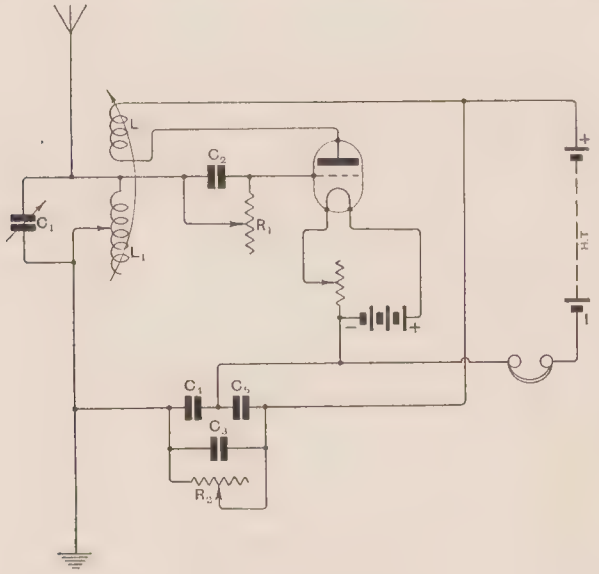

FIG. 86.—A Flewelling receiver.

wind a tube 3 inches in diameter and 4 inches long full of No. 26 D.C.C. If a few taps are taken off it will be easier to make the first adjustments, after which, if it is found there are a few too many turns, it is an easy matter to remove them. The correct number cannot be given accurately on account of the constants of the aerial with which it will be used

all being different. The smaller coil is, of course, mounted, so that it may be slid inside the aerial coil.

If a plug-in coil type of coupling is preferred, a No. 75 or No. 100 coil will be satisfactory, the coil being mounted in a two-coil holder, so that the coupling is easily varied. The three condensers C_3, C_4 and C_5 should all have about the same value, namely, 0·006 μF. The grid condenser, C_2, has the usual value, 0·0003 μF. There are two variable resistances, marked R_1 and R_2; R_1 in particular should be very critically variable, and may be anything from 0·5 megohm to 5 megohms. The value of R_2 lies between 0·5 megohm and 5 megohms as well, but the adjustment is not so critical.

3. *Operation.*

When first trying this circuit, disconnect the condensers C_3, C_4 and C_5 and short-circuit the wires that join each side of C_1. We have now a simple reaction detector valve circuit, and one should tune in signals with this arrangement to be sure the connections and apparatus are in good order.

Now join up the condensers and remove the short-circuiting wire, that is, restore the circuit so that it is connected exactly as shown in the figure. If, now, a signal is tuned in, it will be found that the signal strength may be very greatly increased by altering the adjustments of the resistances R_1 and R_2. A whistle will be heard, and it should be noticed that the lower the value of the resistance R_1, the lower is the pitch of the whistle and the higher the amplification.

When receiving telephony, the resistance R_1 should be so adjusted that the whistle has a high note and is

barely audible. Notice in particular, that it is essential to make adjustments so that this whistle is heard, and to then alter the value of resistance until the whistle is barely audible.

The circuit is very sensitive to slight changes in the value of the variable resistance R_1.

If the whistle is heard with the earth wire disconnected and not with it connected, the aerial condenser C_1 must be joined in series with the coil L_1 instead of in parallel with it, as shown in the diagram.

With a receiver built according to the particulars given here, it is possible to tune in all the broadcast transmissions. We are not, of course, forgetting that the operator must have considerable skill.

The circuit is interesting, because it requires delicate adjustments and amplifies signals which one would not expect to be able to hear at all.

It must be pointed out that the circuit generates oscillations in the aerial circuit, and, therefore, it should not be used for any length of time on an outdoor aerial. Try it on an indoor aerial.

F. The Single-Valve Super-regenerative Receiver

1. *General Principles.*

Many amateurs may like to try the super-regenerative receiver, but they are warned that considerable skill and perseverance are required before the results obtained may be called satisfactory. The receiver is suitable only for short wavelengths.

The diagram shows the simplest form of receiver. The frame aerial is used because the receiver may radiate energy and interfere with others. Across

the frame is connected a coil D and a tuning condenser. One side is joined with the grid condenser and leak, and the other side, through the circuit A, to the filament. The plate circuit consists of the

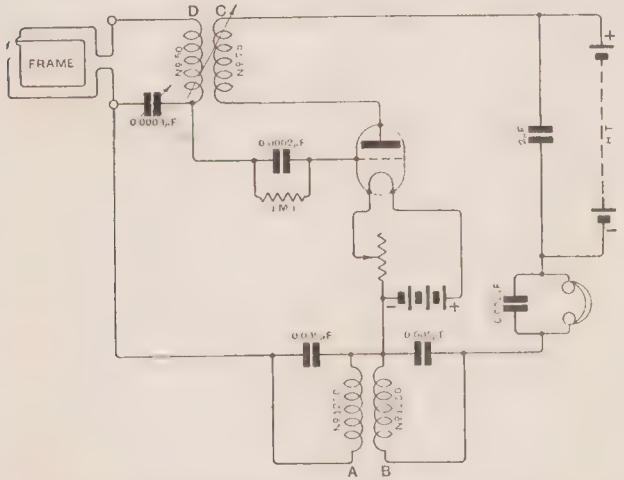

FIG. 87.—Single-valve super-regenerative receiver.

reaction coil C, plate battery, telephones, and the circuit B.

2. *Construction.*

Suitable condenser and coil values are given in the figure. The coils referred to are of the Igranic type. A suitable frame aerial has ten turns of No. 22 D.C.C. spaced $\frac{1}{4}$ inch apart, wound on a square frame with sides 3 feet long. An " R " type valve may be used with a plate voltage of 70 or 80 volts, although it is better to try out the circuit with 40 or 50 volts.

3. *Operation.*

First of all, short-circuit the 0·005 μF. condensers

at A and B, and operate the receiver as an ordinary detector valve reaction circuit. Then remove the short circuit wires, when a whistle should be heard. Vary the coupling between coils A and B until the whistle has a fairly high pitch. It is necessary to carefully adjust the reaction coil C and the coupling between coils A and B, and success will only be obtained after considerable patient effort.

CHAPTER X

DRY CELLS AND ACCUMULATORS

A. Dry Cells

THE battery which is used to supply the plate current to the valves consists of a number of dry cells connected in series.

1. How is a Dry Cell Built?

A section of a dry cell is given in Fig. 88. It consists of a zinc cylinder A, which forms the containing vessel. The base I is fitted to the cylinder, and consists of 75 per cent. asphalt, 12½ per cent. paper pulp, 12½ per cent. resin.

The carbon rod D is surrounded with a depolariser C of manganese dioxide and plumbago, wrapped round with porous paper. The excitant B consists of sal-ammoniac, which is mixed with other salts and forms a paste, and it is poured between the case A and the depolariser C. The top of the cell consists of a layer of cork E and is sealed with a layer of pitch F. The tube G is to

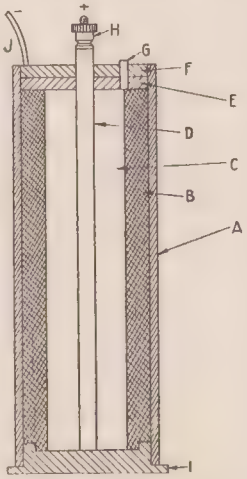

FIG. 88.—Section of a dry cell.

provide an escape for any gases which may be produced by the chemical action of the cell. A terminal H is fitted with the carbon rod, and a wire J with the zinc container. The cell has an electromotive force (or generates a voltage) across its terminals of 1·55 volts. The carbon rod is the positive terminal.

The chemical reaction which takes place when the cell is connected with a circuit is such that zinc chloride and hydrogen are formed. The hydrogen travels in the direction of the current and tends to collect around the carbon. In the cell, however, the carbon rod is surrounded with the depolariser, which is rich in oxygen. The hydrogen unites with the oxygen, forming water. When a large current is taken from the cell the hydrogen collects faster than it can be absorbed by the depolariser, with the result that as hydrogen gas has a very high electrical resistance, the current in the circuit falls off. Dry cells are therefore only suitable for supplying small currents. During the life of the cell the zinc is slowly consumed. The cell, of course, offers resistance to the passage of current. The resistance will be smaller the larger the cell. During the life of the cell its resistance increases as the constituents are gradually consumed. The larger the cell the longer will be its life, and the greater the current which may be taken from it without its voltage falling off.

2. Cells in Series

To connect cells in series the zinc of one cell is connected with the carbon of the next, or, generalising, the positive of one cell is joined with the negative of the next, as shown in Fig. 89. The rule applies, of

course, whether the term "cell" is used to indicate dry cells or accumulators. The positive terminals are usually coloured red, and the negative black.

The effect of connecting cells in series is to increase the total voltage. Thus, if each cell has a potential difference of 1·5 volts, and forty are connected in series, the total voltage available is $40 \times 1{\cdot}5$, or 60 volts. That the voltages of cells in series must add together is obvious when we consider that the

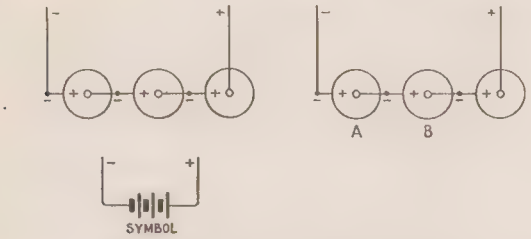

FIG. 89.—Cells connected in series.

negative terminal of cell B, Fig. 89, is at the same potential as that of the positive terminal of cell A, since they are connected with a wire. The positive terminal of cell B is 1·55 volts above that of its negative terminal, therefore the voltage difference between the negative of A and the positive of B is $2 \times 1{\cdot}55$ volts.

When we wish to obtain voltages greater than that of one cell we join them in series. The current available is that which may be taken from a single cell.

3. Cells in Parallel.

With cells in parallel, the positive terminals are all joined together, and the negative terminals are all joined, as shown in Fig. 90. The voltage between

AB is that of a single cell, but the current which may be safely taken from the combination is doubled. If there are N cells connected in parallel, and it is

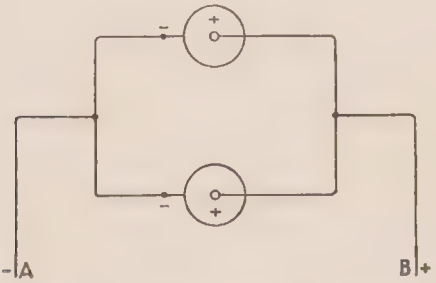

FIG. 90.—Cells connected in parallel.

permissible to take a current of i milliamperes from one cell, with the cells connected in parallel, Ni milliamperes may be taken. *Therefore when we wish to have a larger supply of current than may be obtained from a single cell, we connect several in parallel.*

B. Accumulators

1. *The Construction of an Accumulator.*

An accumulator consists of (*a*) a containing vessel, (*b*) an electrolyte, and (*c*) specially prepared lead plates.

(*a*) *The containing vessel* is generally of celluloid, but may be glass or a prepared composition material.

(*b*) *The electrolyte* consists of dilute sulphuric acid. It is made by adding pure sulphuric acid to distilled water. The density or specific gravity of freshly-made electrolyte intended for accumulators

should generally be 1·200. That is to say, for equal *quantities* of water and electrolyte, the electrolyte will be 1·2 times as heavy as the pure water.

Specific gravity is measured with a hydrometer. There are a number of types, and if the reader proposes to care for his accumulators himself, he should certainly purchase one. They are readily obtained, and cost only a few shillings.

To take a reading with the floating type, the instrument is placed in the electrolyte, and the specific gravity is equal to the reading on the instrument which corresponds with the surface of the liquid.

(*c*) *There are two sets of plates* in an accumulator, one set of positive plates and one of negative plates. The positive plates are burnt to a common lead bar, which is connected to the positive terminal; the same with the negative plates, which are connected to the negative terminal.

There is generally one more negative plate than there are positive plates. The sets of plates interleave, but are prevented from touching each other by separators, which are sometimes of wood.

The positive plates may be distinguished by their chocolate colour. The negative plates are light grey.

The sets of plates are supported so that the bottoms of the plates do not touch the containing case. During service, particles of the plates fall and collect as a sort of sediment. If the plates were too near the bottom, this sediment might make contact between the positives and negatives, in which case the accumulator would very soon be destroyed.

The capacity of a cell, expressed in ampere hours, is largely determined by the number of plates and their area.

C. Charging and Care of Accumulators

Accumulators require considerable attention, and at the time of purchase it is as well to obtain a book of instructions issued by the makers. Study it carefully and be guided accordingly.

New accumulators may be obtained dry. They should be filled with electrolyte as specified by the makers. The electrolyte recommended is usually prepared as described above.

The first charge is a long one, generally thirty to fifty hours of continuous charging with the proper current. For small accumulators, rated at about forty actual ampere hours, the correct current for the first charge is about 2 amperes.

When the cell is fully charged, the plates have a good colour, the voltage is in the neighbourhood of 2·2 volts, and the specific gravity of the electrolyte about 1·220.

During discharge, the voltage and specific gravity fall. The discharge ought not to be continued when the voltage has fallen to about 1·8 volts per cell, and the specific gravity to 1·180. These figures may need slight modification to apply to every make of accumulator. The reader should be guided solely by the makers' instructions.

Normally, the electrolyte reaches a little above the top of the plates. The level may fall, due to evaporation. This should be made good by adding distilled water. Electrolyte or acid should only be added to the cell under expert advice.

A cell requires regular careful treatment. Do not allow it to stand about for long periods in a discharged condition. Sulphating, the presence of which is known by the plates developing a white

deposit, is caused through improper treatment, and once the cell is sulphated, it is very difficult to restore it to its proper condition. Overcharging is likely to do as much damage as undercharging.

Accumulators should be kept in a dry place, and be free from dirt and moisture.

D. The Meaning of Ampere-hour Capacity

An accumulator is built to deliver a current of so many amperes. Suppose it is put on test, so that this value of current is taken from it, and that the time in hours taken by the accumulator to become discharged is measured. The current in amperes, multiplied by the time in hours, gives the actual ampere-hour capacity of the battery.

Accumulators are often given an intermittent rating of so many ampere-hours. An accumulator rated at thirty actual ampere-hours may be given an intermittent rating of sixty ampere-hours. This rating is arrived at by intermittently discharging the accumulator, adding up the products of the current and the times of discharge.

E. Charging Accumulators from Direct Current Mains

1. Those who have a supply of direct current electricity connected to the house may easily arrange to charge their wireless accumulators if so desired.

The most economical method consists in connecting the accumulator in the main lead between the switch, Fig. 91, and the lamp circuit. Referring to the figure: the mains are joined through fuses to a switch. The positive side of the switch is connected with the lamps; between the negative terminal of

the switch and the wire which connects to the lamp switch a break is made and two terminals inserted. The accumulator is connected at this point.

Care must be taken that the accumulator is connected the right way round; that is, the positive

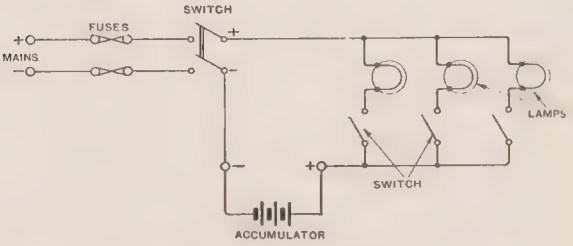

FIG. 91.—Method of using the house electric lighting circuit for charging accumulators.

terminal of the accumulator and the positive terminal of the lighting circuit are joined, and the negative terminal of the switch is joined with the negative terminal of the accumulator.

If the circuit voltage is 220 volts, 220-volt lamps may be used, as normally. Of course, the lamps will not be quite so bright, but the reduction in illumination is hardly noticeable.

Every time a lamp is switched on, the lamp current passes through the accumulator, and, of course, the more lamps in circuit, the larger is the charging current.

The charging current will be small, depending on the candle-power and efficiency of the lamps, but one may estimate $\frac{1}{4}$ ampere for each lamp. The charging will, therefore, take a long time. If an ammeter is available, it should be connected in the

circuit between the negative terminal of the battery and the negative terminal of the switch.

F. The Use of a Charging Frame

Those who have a supply of direct current electric power may prefer to charge the accumulator from a charging board.

A charging board consists of a number of resist-

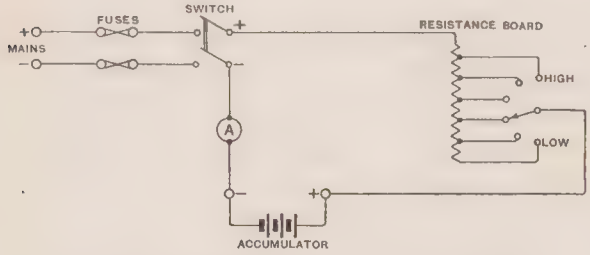

FIG. 92.—Charging from the D.C. wires through a resistance board.

ances and a stud switch connected as in Fig. 92. By altering the position of the switch, the amount of resistance in circuit is altered.

The current which flows in a circuit is equal to the voltage divided by the resistance. Thus, if the voltage of the mains is 220, and we allow 10 volts for charging a six-volt battery, the resistance must have such a value that when the required charging current is flowing, the voltage across the resistance is $220 - 10 = 210$ volts.

Suppose we decide to charge at the rate of 3 amperes, which is a usual charging current for a thirty ampere-hour accumulator. Then the value of the resistance should be $\frac{210}{3} = 70$ ohms. As we

may desire to vary the charging current from time to time, the resistance board would be constructed with a resistance variable by means of the tappings from 60 ohms to 150 ohms.

The construction is shown in Fig. 93, and is almost self-explanatory. A slate panel has a number of reel insulators, marked A, fastened to it. The resistance wire, which is wound in the form of a spiral about 1 inch in diameter B, is strung between the reels. Tappings are taken as indicated to the studs C of the switch S.

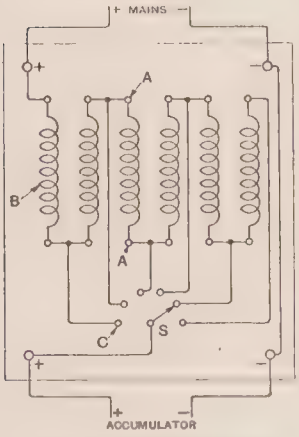

FIG. 93.—Construction of a resistance board.

The right size of wire to use is decided as follows: Decide the maximum charging current, say 3 amperes. Now choose a resistance wire which will safely carry this current. If Eureka resistance wire is used, No. 20 gauge safely carries 3 amperes.

From the wire tables, we find No. 20 Eureka wire has a resistance of 600 ohms per 1,000 yards. We require a maximum resistance of 150 ohms, therefore the total length of wire necessary is about 250 yards. If six spirals are used, we shall use 42 yards in each. When they are wound, decide upon the size of the charging panel, allowing room for the stud switch and terminals.

G. Charging Accumulators from Alternating Current Mains

Before an alternating current supply may be used for accumulator charging, the current must be rectified. Ordinary valve rectifiers are not economical, so that one uses either of three methods : —

(*a*) Chemical rectifier.
(*b*) Mechanical rectifier.
(*c*) Special valve rectifier ; for example, the Tungar rectifier.

(*a*) *Chemical rectifiers.*

The construction of a chemical rectifier is shown in Fig. 94. The jar is filled with electrolyte, into which dips a central carbon rod, and outer rods of aluminium. The rods are fastened to an ebonite cap which fits the top of the jar.

The electrolyte consists of a mixture of water and sodium phosphate or sodium bicarbonate.

The alternating current mains are connected to the primary winding of a transformer. The secondary winding has a centre tap. The voltage required for each half of the transformer secondary is 10 volts, plus the voltage necessary for charging. If we allow 3 volts per cell, when a 6-volt

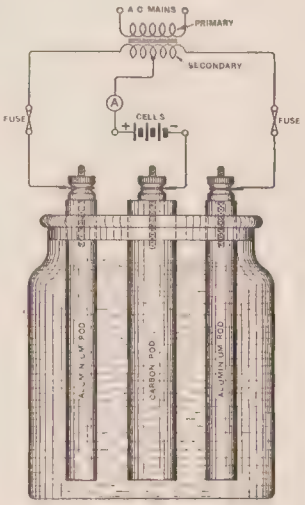

FIG. 94.—Chemical rectifier for use when charging accumulators from A.C. wires.

accumulator is to be charged, we should require a total voltage of 10 + 9 = 19 volts from each half.

The correct connections of the battery are given in the figure.

To obtain a satisfactory charging current, the jar should be large enough to hold about half a gallon.

The aluminium rods should be about ½ inch to 1 inch diameter, or its equivalent if the aluminium has any other shape. The carbon rod may be a slab about 2 inches wide and ½ inch thick. The length of the rods is determined by the size of the jar.

(*b* and *c*) If the reader purchases a mechanical or valve rectifier, full instructions may be obtained from the manufacturers.

H. Chemical Rectifier for H.T. Supply

If it is required to use the alternating current mains for supplying the high-tension voltage to the wireless receiver or transmitter, a rectifier must be used to rectify the A.C.

A single rectifier cell is capable of dealing with about 50–70 volts, therefore for a receiver we may use single cells. The cells are joined as in Fig. 95.

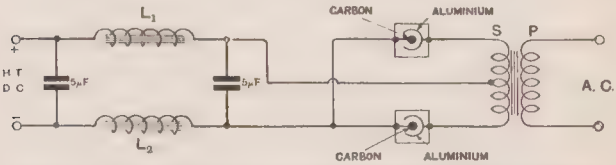

FIG. 95.—Connections of chemical rectifier and smoothing unit for supplying valve current from A.C. wires.

The choke coils L_1 and L_2 with the 5 μF. condensers are for the purpose of smoothing the rectified direct current. The choke coils may each consist of about

20,000 turns of No. 38 D.S.C. wound on an iron core which is about 4 inches long and 1 square inch in cross-sectional area.

When high voltages are required, a number of cells should be connected in series, remembering that each cell is capable of dealing with about 70 volts.

Chemical rectifiers should not be worked so that the solution becomes warm. When the cell reaches a certain temperature, it no longer rectifies.

PRINTED IN GREAT BRITAIN BY THE WHITEFRIARS PRESS, LTD.,
LONDON AND TONBRIDGE

AN ABRIDGED LIST OF THE PUBLICATIONS OF THE WIRELESS PRESS, LTD.

12 & 13, HENRIETTA STREET, STRAND, LONDON, W.C. 2.

The A.B.C. of Wireless.

By Percy W. Harris. This wonderful little book has been specially prepared for those who are desirous of getting a good knowledge of wireless without delving into text-books. Crown 8vo. 64 pages. Well Illustrated. Price 6d. net. Post free, 7d.

Alternating Current Work.

By A. Shore, A.M.I.E.E. Crown 8vo. 163 pages. 86 Diagrams and Illustrations. Price 3s. 6d. net. Post free, 3s. 9d.

The Amateur's Book of Wireless Circuits.

By F. H. Haynes. The most up-to-date book of circuits yet published and one which every amateur will require. The only book giving full values of condensers, etc. These circuits are not merely extracted from text-books and embodying a few well-known principles, but are specially prepared to meet the requirements of all users of wireless apparatus. Size 10 by 6½ in. 110 pages. 111 practical Circuits. Price 2s. 6d. net. Post free, 2s. 10d.

Calculation and Measurement of Inductance and Capacity.

By W. H. Nottage, B.Sc. The more generally useful formulæ and methods of measurement for inductance and capacity are herein brought together in a convenient form. Demy 8vo. 144 pages. Over 50 Illustrations and Diagrams. Price 3s. 6d. net. Post free, 3s. 10d.

The Construction of Amateur Valve Stations.

By Alan L. M. Douglas. The aim of the author has been to place within the reach of the amateur a Handbook which will enable him to obtain data that he has otherwise difficulty in acquiring, in order that he may construct apparatus which he does not quite know how to design correctly. Crown 8vo. 78 pages. 55 Diagrams and Illustrations. Price 1s. 6d. net. Post free, 1s. 7d.

Continuous Wave Wireless Telegraphy. Part I.

By W. H. Eccles, D.Sc., A.R.C.S., M.I.E.E. Demy 8vo. 407 pages. 306 Diagrams and Illustrations. Price 25s. net. Post free, 25s. 6d.

Crystal Receivers for Broadcast Reception.

By P. W. Harris. An explanation in popular language of the principles upon which the numerous Crystal Receiving Sets now on the market are designed, the reasons for the differences between them, and how all of them can be adjusted for the greatest efficiency. Full directions for building a Simple Crystal Receiver for Wireless Telephone Broadcasting are also given. Crown 8vo. 80 pages. Over 70 Photographs and Diagrams. Price 1s. 6d. net. Post free, 1s. 7d.

Dictionary of Technical Terms used in Wireless Telegraphy.

By HAROLD WARD. Second Edition. Revised and enlarged. 253 pages. Contains over 1,500 definitions. Size 2 by 3 inches. Price 2s. 6d. net. Post free, 2s. 8d.

Direction and Position Finding by Wireless.

By R. KEEN, B. Eng. (Hons.) Sheffield, A.M.I.E.E. This book deals not only with the principles of the subject but with the constructional details of direction finding installations. It describes the principles of direction and position finding in this country in such a way that the subject may be grasped easily by engineers tackling this field of wireless work for the first time. Demy 8vo. 363 pages. Over 250 Photographs and Diagrams. Price 9s. net. Post free, 9s. 6d.

My Electrical Workshop. A Book for the Electrical Experimenter.

By FRANK T. ADDYMAN. Preceding each experiment a list of the simple materials required is given. The illustrations clearly show "how it is done," and the whole book is one which will give a great amount of useful and interesting amusement. Demy 8vo. 249 pages. 169 Diagrams and Illustrations. Price 5s. net. Post free, 5s. 6d.

Electrons, Electric Waves and Wireless Telephony.

By J. A. FLEMING, M.A., D.Sc., F.R.S. A course of popular lectures delivered by the author at the Royal Institution of Great Britain forms the basis of this work. The simple analogies and the clear way in which the book is written enables it to be understood by all. In effect it is a treatise on the elementary principles of wireless telephony presented in a non-technical manner, and is recommended to all anxious to understand wireless. 326 pages. 112 Photographs and Diagrams. Price 7s. 6d. Post free, 8s.

The Elementary Principles of Wireless Telegraphy.

By R. D. BANGAY. Universally acknowledged to be the soundest text-book on the subject. Crown 8vo. Published in two parts or bound in one volume. Price per part, 4s. net. Post free, 4s. 5d. In one volume, 7s. 6d. net. Post free, 8s.

Elgie's Weather Book for the General Reader.

By J. H. ELGIE. "Mr. Elgie is not tiresomely technical, as experts commonly are. He writes in a well read, readable way. Anyone who wants to know anything about weather will find him a pleasant as well as a competent guide."—*The Daily Mail.* Crown 8vo. 251 pages. Well illustrated. Price 5s. net. Post free, 5s. 6d.

Fifty Years of Electricity: The Memories of an Electrical Engineer.

By J. A. FLEMING, M.A., D.Sc., F.R.S. A comprehensive review for the general reader of the chief triumphs of electricity during the last half-century. In this book Dr. Fleming covers practically every phase of electrical work. Crown 4to. 371 pages. 111 Plates. Price 30s net. Post free, 30s. 9d.

The Handbook of Technical Instruction for Wireless Telegraphists, 3rd Edition, Revised and Enlarged.

By J. C. HAWKHEAD and H. M. DOWSETT, M.I.E.E. Those desirous of receiving simple instruction in the general principles of practical W.T. will find this book particularly useful. It provides a complete theoretical course for the Postmaster-General's certificate, and deals particularly with apparatus used on board various ships. Demy 8vo. 406 pages. 316 Diagrams and Illustrations. Price 7s. 6d. Post free, 8s.

How to Build Amateur Valve Stations.

By P. R. COURSEY, B.Sc. (Eng.), F.Inst.P., A.M.I.E.E. This book will guide the prospective wireless amateur in the way of building up his own valve receiving apparatus. The component parts are briefly described and illustrated, and their use in building up various types of sets is explained. Several different arrangements of receiving "units" are described in detail, since the use of this method of building radio sets enables a number of different receiving combinations to be obtained. Crown 8vo. 70 pages. 70 Diagrams and Illustrations. Price 1s. 6d. net. Post free, 1s. 7d.

Magnetism and Electricity for Home Study.

By H. E. PENROSE. The lucid way in which the author puts the matter before the reader; the sequence followed (proceeding from the known to the unknown); the numerous analogies and associations with ordinary everyday things; and the excellent sketches and diagrams, together with test questions and summaries, make the work admirable for self study or as a book for school use. Contains 50 graded lessons. Eminently suitable for a Secondary School Textbook. Crown 8vo. 515 pages. 224 Diagrams. Price 6s. net. Post free, 6s. 6d.

Mast and Aerial Construction for Amateurs.

By F. J. AINSLEY, A.M.I.C.E. The book is one which the amateur will read with gratitude to the author, who has rendered a great service in removing the difficulties of mast and aerial construction. With the use of a few ordinary tools and by following the instructions given in the book this will be found a simple matter. Crown 8vo. 88 pages. 70 Diagrams and Illustrations. Price 1s. 6d. net. Post free, 1s. 7d.

Morse Code Card.

Contains full alphabet, with punctuation marks, figures, abbreviations and contractions. Price 2d. net. Post free, 3d.

Morse Made Easy.

By A. L. RYE. Printed on strong linen card, this valuable illustrated explanation can be carried about ready for use anywhere and everywhere. A thorough system of memorising is suggested, which will facilitate the learning of the Morse Code in the shortest possible time. Price 3d. net. Post free, 3½d.

The Oscillation Valve—The Elementary Principles of its Application to Wireless Telegraphy.

By R. D. BANGAY. The increasingly important part played by the valve in all modern wireless installations makes it essential that all those interested in wireless communication should have an elementary knowledge of its actions and the purposes underlying its various uses. Crown 8vo. 215 pages. Price 6s. net; Post free, 6s. 3d.

The Perry Auto-Time Morse System.

By F. W. PERRY. An aid to the rapid acquirement of speed in the transmission and reception of the Morse Code. The Perry system teaches you Morse interestingly so that its study is a real hobby. 16 pages. Price 6d. net. Post free, 7d.

Practical Wireless Sets for All.

Home Construction Made Easy. By PERCY W. HARRIS. No previous knowledge is necessary to construct the reliable, efficient, and thoroughly tested receiving sets described in this book. Full working instructions are given and the clear manner in which the information is presented, and the equally clear diagrams and photographs showing all wiring connections, leave no possibility of doubt in the mind of the constructor. Crown 8vo. 77 pages. 30 Diagrams, etc. Price 1s. 6d. net. Post free, 1s. 8d.

The Radio Experimenter's Handbook, Parts I. and II.

By P. R. COURSEY, B.Sc. (Eng.), F.Inst.P., A.M.I.E.E. The aim of the true wireless experimenter should not be merely to purchase a complete installation or to build one from a complete set of working drawings, but rather to design his set to meet his own requirements. Part I. deals with the general principles underlying the design of radio receiving equipment, and the Second Part is devoted to data and actual quantitative design, as well as to the description of many simple high-frequency measurements which can readily be carried out by the experimenter. Medium 8vo. Price 3s. 6d. each net. Post free, 3s. 10d. each.

Selected Studies in Elementary Physics. A Handbook for the Wireless Student and Amateur.

By E. BLAKE, A.M.I.E.E. Crown 8vo. 176 pages. 43 Diagrams and Illustrations. Price 5s. net. Post free, 5s. 3d.

A Short Course in Elementary Mathematics and their Application to Wireless Telegraphy.

By S. J. WILLIS. A book which should prove of real value to all engaged in this science. Demy 8vo. 182 pages. 120 Diagrams. Price 5s. net. Post free, 5s. 6d.

Standard Tables and Equations in Radio Telegraphy.

By BERTRAM HOYLE, M.Sc. Tech., A.M.I.E.E. Demy 8vo. 159 pages. Price 9s. net. Post free, 9s. 5d.

Students' Library—Useful Notes on Wireless Telegraphy.

By H. E. PENROSE. Book 1: Direct Current. 2: Alternating Current. 3: High-frequency Current and Wave Production. 4: The 1½ K.W. Ship Set. 5: The Oscillation Valve. Price 1s. 4d. each. Post free, 1s. 5d. each.

Telephony Without Wires.

By PHILIP R. COURSEY, B.Sc. (Eng.), A.M.I.E.E. A complete collection of information on the various schemes proposed and tried relative to the transmission of wireless telephony. Demy 8vo. 414 pages. Over 250 Diagrams and Illustrations. Price 15s. net. Post free, 15s. 6d.

The Thermionic Valve and its Development in Radio-Telegraphy and Telephony.

By J. A. FLEMING, M.A., D.Sc., F.R.S., etc. Demy 8vo. 279 pages. 144 Diagrams and Illustrations. Price 15s. net. Post free, 15s. 6d.

The Wireless Telegraphist's Pocket Book of Notes, Formulæ, and Calculations.

By J. A. FLEMING, M.A., D.Sc., F.R.S., M.Inst. E.E., etc. 352 pages. Size 7½ by 4½ in. 39 Diagrams and Illustrations. Price 9s. net. Post free, 9s. 5d.

Wireless Telegraphy and Telephony—First Principles, Present Practice, and Testing.

By H. M. DOWSETT, M.I.E.E. Demy 8vo. 331 pages. 305 Diagrams and Illustrations. Price 9s. net. Post free, 9s. 6d.

The Wireless Telephone: What it is and How it Works.

By P. R. COURSEY, B.Sc., F.Inst.P. This book sets out in a simple manner not only the essential of the radiotelephone, but how it operates, and how its parts are built up. To give a clearer idea of the appearance and arrangements of the apparatus than can be conveyed by ordinary circuit diagrams many sketches and photographic illustrations are given. 128 pages. Well illustrated. Price 2s. 6d. net. Post free, 2s. 9d.

The Wireless Transmission of Photographs.

The only book on this subject. By MARCUS J. MARTIN. Second edition. Demy 8vo. 145 pages. 77 Diagrams and Illustrations. Price 5s. net. Post free, 5s. 6d.

Your Broadcast Receiver and How to Work it.

By P. W. HARRIS. Hints and tips for the Radio Listener. Every owner of a wireless set is naturally anxious to get the best possible results from the particular apparatus he has acquired. Our purpose is just to help the beginner to get all that is possible out of the receiver, be it a humble crystal or an elaborate multi-valve set. Crown 8vo. 68 pages. Illustrated. Price 6d. net. Post free, 7d.

4d.

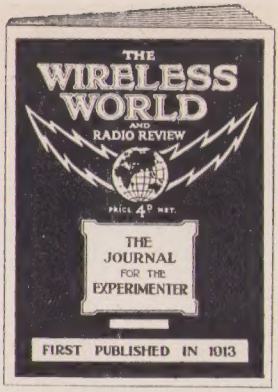

4d

EVERY WEDNESDAY.

The Oldest Wireless Journal

Since 1913 the WIRELESS WORLD & RADIO REVIEW has supported and catered for the experimenting amateur.

The WIRELESS WORLD informs you:

How to make your own apparatus.

The tools required and how to use them.

The principles of wireless telegraphy and telephony, and enables you to progress step by step to the advanced stages.

It keeps you regularly posted regarding latest developments and improvements.

Gives excellent articles on important current wireless topics.

A special department to answer all your queries.

Send P.C. for free specimen copy.

THE WIRELESS PRESS, LTD.

12/13, HENRIETTA STREET, LONDON, W.C. 2.

WP
WIRELESS PRESS